2005 EVINRUDE®

Parts Catalog

200,225,250 HP (3279 cc)
Direct Injection Models

E200FPLSOE E225FPLSOE E250FPLSOM
E200FPXSOE E225FPXSOE E250FPXSOB
E200FCXSOE E225FPZSOE E250FPZSOB
E200FSLSOE E225FCXSOE E250FCXSOB
E200FHLSOR E225FCZSOE E250FCZSOB
E225FHLSOB
E225FHXSOC

200 - 250 D.I. 90° V6

© 2004 BRP US Inc. All rights reserved.
TM, ® Trademarks of Bombardier Recreational Products Inc. or its affiliates.

ABOUT THIS CATALOG

Bombardier Recreational Products Inc. reserves the right to make changes at any time, without notice, to features, specifications, and model availability. The right is also reserved to change any specification or part, at any time, without incurring any obligation to update older models. The information in this catalog is based on the latest specifications available at the time of publication.

For the latest service part number information visit

EPC *(Electronic Parts Catalogs)* on the **DealerPort**™ website.

www.dealerport.com

Illustrations used in this catalog may not depict actual models or equipment, but are intended as representative views for reference only. Certain features, equipment or accessories shown in this catalog might not be found on or included with all models in all marketing areas.

IMPORTANT: This catalog is a part reference. Refer to the appropriate *Evinrude/Johnson* Service Manual for exact service and maintenance information. Use exact engine model number, including any suffix letter, when indentifying parts in this catalog.

The continuing accuracy of this catalog cannot be guaranteed.

PARTS LIST REFERENCE

Following Example for Reference Only

1	584348	BATTERY CABLE, 10ft. (3.M) **(DR Models Only)**		1
2	351839	SCREW, Starter to C/C	***New***	2
3	586774	STARTER SOLENOID Assy		1
		(Solenoid Assy. included on DR, DE & DP models)		
4	N/A	*DRIVE KIT	***NS***	1
5	586103	**GROMMET, Starter solenoid mount	***Opt.***	2
6	341512	BOLT, Double ended-Harness ground	***A***	1
A	Only used on WR, WPR Models			

a b c d e f g

a	"N/A" Indicates part is NOT AVAILABLE or NOT AVAILABLE individually.
b	"*" Indicates parts are included in the preceding assembly.
	EXAMPLE SHOWN: (Ref #3) - P/N 586774 includes (Ref #4) - P/N 586101 and (Ref # 5) - "GROMMET". Also (Ref #4) - P/N 586101 includes (Ref # 5) - "GROMMET".
c	"***A***" Upper case alpha characters used as callout indicate additional part information is shown at the bottom of the list.
d	Additional part information.
e	***"New"*** Indicates part and/or part number has been added or changed from previous model year.
f	***"NS"*** Indicates part is Not Shown in illustration.
g	***"Opt."*** Indicates part is an OPTIONAL or ACCESSORY part.

WARNING

When replacement parts are required, use Evinrude/Johnson Genuine Parts or parts with equivalent characteristics, including type, strength, and material. Using substandard parts could result in injury or product malfunction.

TABLE OF CONTENTS

LITERATURE 2
PAINT 2
MODEL FEATURES 3
PARTS SHIPPED WITH ENGINE "IN BOX" 3
PROFILE DRAWING 4
2005 LITERATURE - ALL MODELS 5
DECALS - "BLUE" MODELS 6
DECALS - "WHITE" MODELS 7
DECALS - FHL & FHX MODELS 8
DECAL SET - "BLUE" MODELS (ACCESSORY) 9
DECAL SET - "WHITE" MODELS (ACCESSORY) 10
ENGINE COVER 11
LOWER ENGINE COVER 12-13
ENGINE ELECTRICAL HARNESS ASSEMBLY 14-15
ELECTRICAL SYSTEM 16-17
FUEL COMPONENTS 18-19
OIL COMPONENTS 20
OIL TANK (ACCESSORY) 21
INTAKE MANIFOLD 22
CRANKSHAFT & PISTONS 23
CYLINDER & CRANKCASE 24-25
ELECTRIC STARTER 26
POWER TRIM/TILT HYDRAULIC ASSEMBLY 27
EXHAUST HOUSING 28-29
MIDSECTION 30-31
STEERING LINK KIT (ACCESSORY) 32
DUAL STEERING CONNECTOR KIT (ACCESSORY) 33
GEARCASE - FHL & FHX MODELS ("L" TYPE GEARCASE) 34-35
GEARCASE - FPL, FSL, FPX & FPZ MODELS ("M" TYPE GEARCASE) 36-37
GEARCASE - FCX & FCZ MODELS ("M" TYPE GEARCASE) 38-39
PROPELLERS & HARDWARE (ALUMINUM) (ACCESSORY) 40
PROPELLERS & HARDWARE (STAINLESS STEEL 3 BLADE) (ACCESSORY) 41
PROPELLERS & HARDWARE (STAINLESS STEEL 4 BLADE) (ACCESSORY) 42
PROPELLERS & HARDWARE (HIGH PERFORMANCE) (ACCESSORY) 43

LITERATURE

5005978	SERVICE MANUAL – ENGLISH
5005979	SERVICE MANUAL – FRENCH
215610	OPERATOR'S GUIDE – ENGLISH
215611	OPERATOR'S GUIDE – FRENCH
5005924	SPECIAL TOOLS CATALOG

PAINT

COLOR NAME	SPRAY CAN	PPG # [1]	PPG # [2]
PRIMER	777172	DP40401	–
BLACK [3]	777179	9696	–
BLUE	777175	18319	18320
WHITE	777171	90538	–
CLEARCOAT	772414	–	–

1. ONE COAT FINISH FOR MIDSECTION & GEARCASE
2. BASE COAT PLUS CLEARCOAT FOR UPPER & LOWER ENGINE COVERS
3. USED ON ENGINE CRANKCASE ASSEMBLY.

상업적 목적으로 불법복제 및 배포를 금함

MODEL FEATURES

All Models				
Cylinder Configuration	***Fuel Induction***	***Charging***	***Steering***	***Starting***
90° V-6	Direct Injection	35 Amp	Remote	Electric

Model Specific				
Model Number	***Shaft Length***	***Color***	***Steering Arm Type***	***Gearcase***
E200FPLSOE	20"	Blue	Standard Steering Arm	"M" Type Gearcase
E200FPXSOE	25"	White	Stainless Steel Steering Arm	"M" Type Gearcase
E200FCXSOE	25"	White	Stainless Steel Steering Arm	Counter Rotation "M" Type Gearcase
E200FSLSOE	20"	White	Stainless Steel Steering Arm	"M" Type Gearcase
E200FHLSOR	20"	Blue	Standard Steering Arm	"L" Type Gearcase
E225FPLSOE	20"	Blue	Standard Steering Arm	"M" Type Gearcase
E225FPXSOE	25"	White	Stainless Steel Steering Arm	"M" Type Gearcase
E225FPZSOE	30"	White	Stainless Steel Steering Arm	"M" Type Gearcase
E225FCXSOE	25"	White	Stainless Steel Steering Arm	Counter Rotation "M" Type Gearcase
E225FCZSOE	30"	White	Stainless Steel Steering Arm	Counter Rotation "M" Type Gearcase
E225FHLSOB	20"	Blue	Standard Steering Arm	"L" Type Gearcase
E225FHXSOC	25"	Blue	Stainless Steel Steering Arm	"L" Type Gearcase
E250FPLSOM	20"	Blue	Standard Steering Arm	"M" Type Gearcase
E250FPXSOB	25"	White	Stainless Steel Steering Arm	"M" Type Gearcase
E250FPZSOB	30"	White	Stainless Steel Steering Arm	"M" Type Gearcase
E250FCXSOB	25"	White	Stainless Steel Steering Arm	Counter Rotation "M" Type Gearcase
E250FCZSOB	30"	White	Stainless Steel Steering Arm	Counter Rotation "M" Type Gearcase

PARTS SHIPPED WITH ENGINE "IN BOX"

P/N	***Name of Part***	***Qty***
215610	OPERATOR'S GUIDE - ENGLISH	1
434153	PROPELLER HARDWARE KIT	1
126870	*BUSHING,THRUST	1
306394	*PIN,COTTER	1
320570	*SPACER,PROPELLER NUT	1
398042	*NUT, PROPELLER	1
318572	CAP, TRANSOM SCREW	4
318572	CAP	4
328064	NUT, SHIFT & THROTTLE LEVER	2
328725	SCREW, SHIFT COVER & THROTTLE CABLE	2
328737	WASHER, SHIFT & THROTTLE LEVER	2
329271	COVER, TRUNNION	2
337586	NUT,STEERING CABLE WIPER	1
346150	CLAMP, FUEL HOSE INLET (18.5mm)	1
346786	CLAMP, OIL RETURN HOSE(15.7mm)	1
347108	CLAMP, OIL INLET HOSE (13.8mm)	1
778711	HOSE, OIL RETURN (15 ft.)	1

상업적목적으로 불법금지 / 배포금지

PROFILE DRAWING

39 5/8 in. (1006.47mm) - *20 in. (508mm) model*
44 5/8 in. (1133.47mm) - *25 in. (635mm) model*
49 5/8 in. (1260.47mm) - *30 in. (762mm) model*

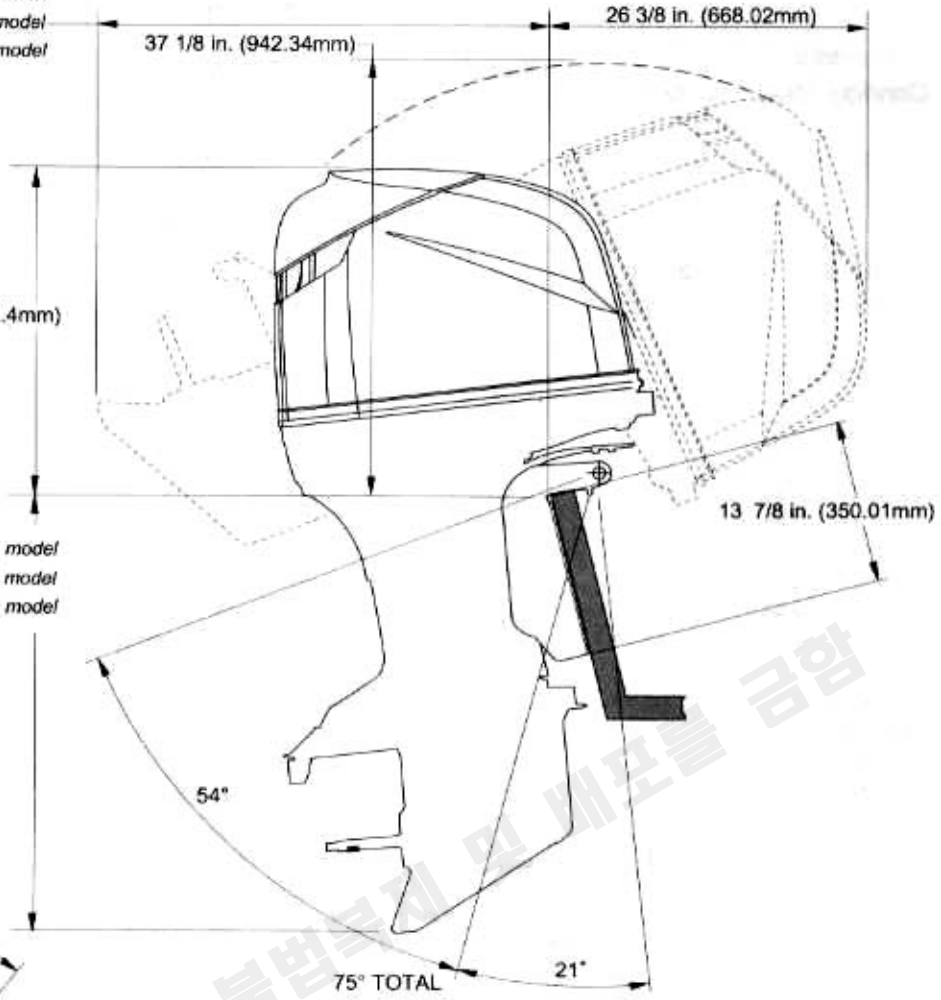

38 3/16 in. (967.74mm) - *20 in. (508mm) model*
43 3/16 in. (1094.74mm) - *25 in. (635mm) model*
48 3/16 in. (1221.74mm) - *30 in. (762mm) model*

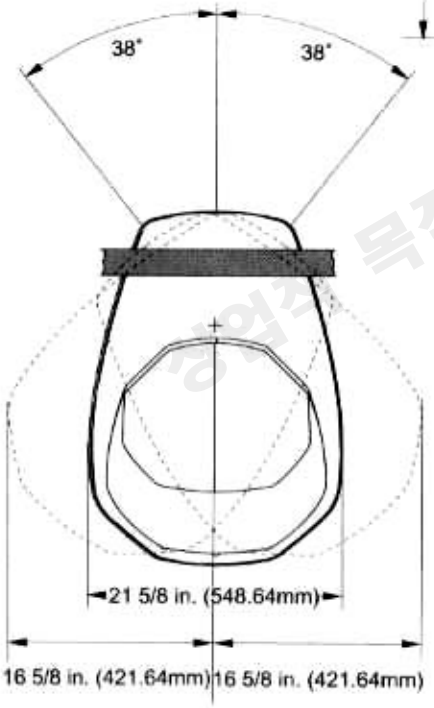

All *Evinrude®* / *Johnson®* outboards are designed to function within the minimum clearances outlined in ABYC transom and motor well Standard S-12-83.

ALL MEASURMENTS BASED ON:
TRANSOM ANGLE 14°
TRANSOM THICKNESS 2 3/4 in. (68.58mm) MAXIMUM

GRAPHICAL REPRESENTATION ONLY:
ALL DIMENSIONS ± 1/4 in. (6.35mm)

POWER TRIM & TILT:
TRIM RANGE 21°
TOTAL RANGE 75°

영업적 목적으로 불법복제 및 배포를 금함

2005 LITERATURE - ALL MODELS

2 Stroke Models					
Description	English Operator's Guide	French Operator's Guide	Part Catalog	English Service Manual	French Service Manual
3.5 HP	215587	215588	5006019	5005962	5005963
6 & 8 HP	215589	215590	5006020	5005962	5005963
9.9/15 HP	215597	215598	5006021	5005964	5005965
15 HP Commercial	215597	215598	5006021	5005964	5005965
25/30 HP Rope	215593	215594	5006022	5005964	5005965
25/30 HP Tiller Electric	215593	215594	5006023	5005964	5005965
25/30 HP Remote	215595	215596	5006024	5005964	5005965
25 HP Commercial	215593	215594	5006022	5005964	5005965
40 HP Rope	215599	215600	5006025	5005966	5005967
50 HP Remote	215601	215602	5006025	5005966	5005967
40 HP E-TEC Rope	215638	215640	5006027	5005968	5005969
40-50 HP ETEC Remote	215639	215641	5006027	5005968	5005969
60 HP E-TEC Commercial	215568	215659	5006027	5005968	5005969
75/90 HP E-TEC	215642	215643	5006028	5005970	5005971
55 HP Commercial 20 in.	215603	215604	5006029	5005972	5005973
55 HP Commercial 22.5 in.	215603	215604	5006029	5005972	5005973
115 HP Commercial	215605	215606	5006030	5005974	5005975
90 - 115 HP Carbureted	215605	215606	5006030	5005974	5005975
135 - 175 HP Carbureted	215605	215606	5006031	5005974	5005975
100 - 115 HP D.I.	215610	215611	5006032	5005976	5005977
135 - 175 HP D.I.	215610	215611	5006033	5005976	5005977
200 - 250 HP D.I.	215610	215611	5006035	5005978	5005979
200 - 250 HP E-TEC	215645	215647	5006061	5006059	5006060

4 Stroke Models					
Description	English Operator's Guide	French Operator's Guide	Part Catalog	English Service Manual	French Service Manual
4/5/6 HP	5035751	5035752	5006036	5005988	5005989
9.9/15 HP Rope	5035753	5035754	5006037	5005990	5005991
9.9/15 HP Remote	5035755	5035756	5006037	5005990	5005991
25 HP Rope & Tiller Electric	5035769	5035770	5006038	5005992	5005993
25 HP Remote	5035771	5035772	5006038	5005992	5005993
30 HP Rope & Tiller Electric	5035757	5035758	5006038	5005992	5005993
30 HP Remote	5035759	5035760	5006038	5005992	5005993
40/50 HP	5035761	5035762	5006039	5005994	5005995
60/70 HP	5035763	5035764	5006040	5005996	5005997
90/115 HP	5035765	5035766	5006041	5005998	5005999
140 HP	5035765	5035766	5006042	5005998	5005999
200/225 HP	5035767	5035768	5006043	5006000	5006001

Literature Sets	
Description	P/N
2005 Part Catalog Set - Paper	5006044
2005 Part Catalog Microfiche Set	5006045
Illustrated Parts & Accessory Catalog	5006046
2005 Genuine Parts Accessory Parts Dealer Catalog	778880
2004 Part Catalog CD (PDF Set)	5006072
2005 Part Catalog CD (PDF Set)	5006075
2005 English Service Manual Set - 2 Stroke	5005980
2005 French Service Manual Set - 2 Stroke	5005981
2005 English Service Manual Set - 2 Stroke D.I. & E-TEC	5005982
2005 French Service Manual Set - 2 Stroke D.I. & E-TEC	5005983
2005 English Service Manual Set - 4 Stroke	5005984
2005 French Service Manual Set - 4 Stroke	5005985

Shop Catalogs	
Description	P/N
2004 Special Tools Catalog	5005924
1913-2005 Model Number Reference Guide	5006145
2005 Warranty Procedures & Flat Rate Guide - English	5006217
2005 Warranty Procedures & Flat Rate Guide - French	5006218
Predelivery & Installation Guide - All Models - English	5006079
Predelivery & Installation Guide - All Models - French	5006121

DECALS - "BLUE" MODELS

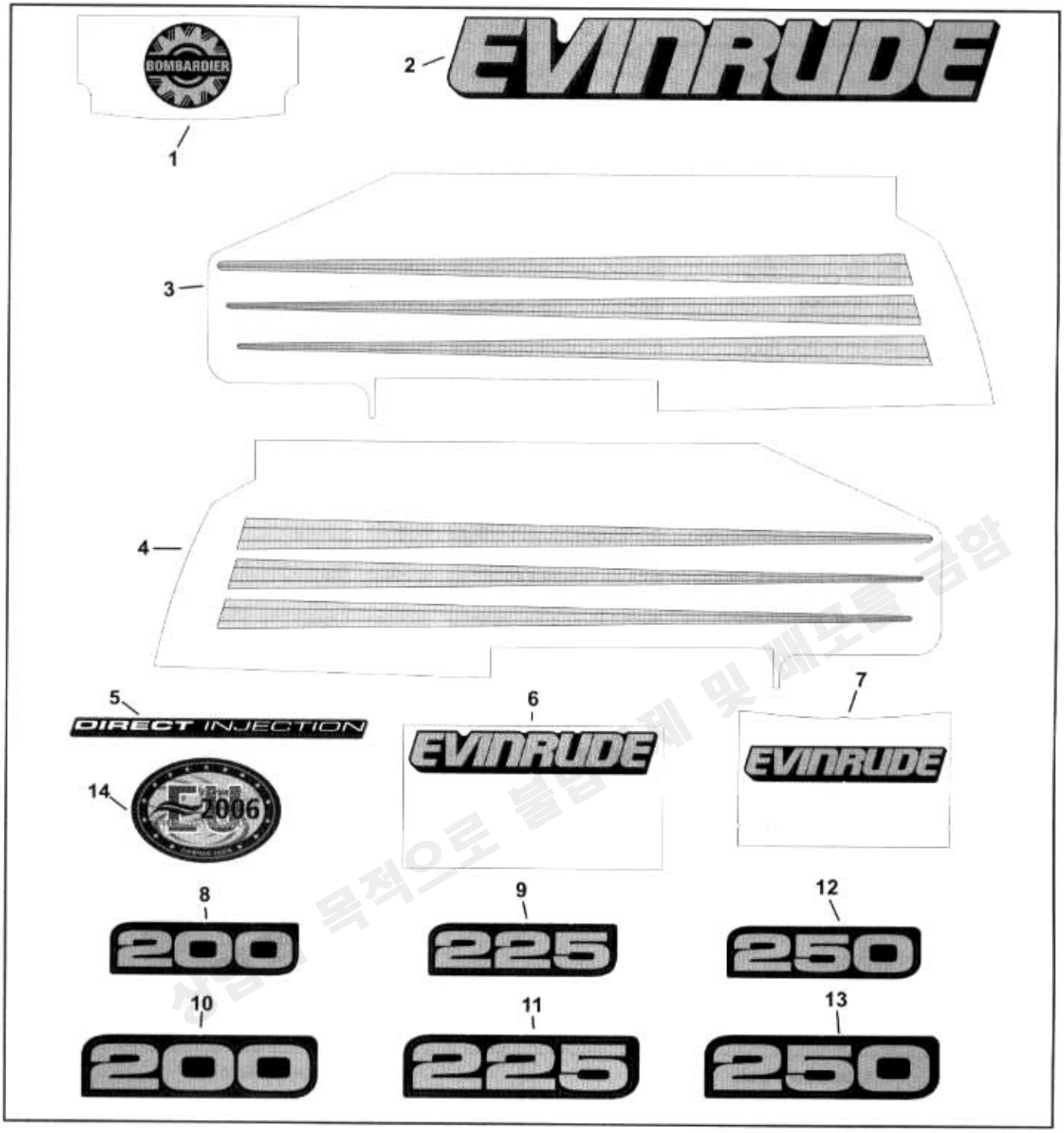

EPC3411

Ref	P/N	Name of Part		Qty	Ref	P/N	Name of Part	Qty
1	215238	"BOMBARDIER" - Front/Rear	*A*	2	8	215232	"200" - Front	1
2	215237	"EVINRUDE" - Port/Stbd	*A*	2	9	215230	"225" - Front	1
3	215241	STRIPE - Stbd	*A*	1	10	215233	"200" - Rear	1
4	215242	STRIPE - Port	*A*	1	11	215234	"225" - Rear	1
5	215555	"DIRECT INJECTION" Port/Stbd	*A*	2	12	215341	"250" - Front	1
6	215244	"EVINRUDE" - Rear	*A*	1	13	215342	"250" - Rear	1
7	215243	"EVINRUDE" - Front	*A*	1	14	215558	"EVINRUDE EU2006"	1

A Included with **"ENGINE COVER Assy"**

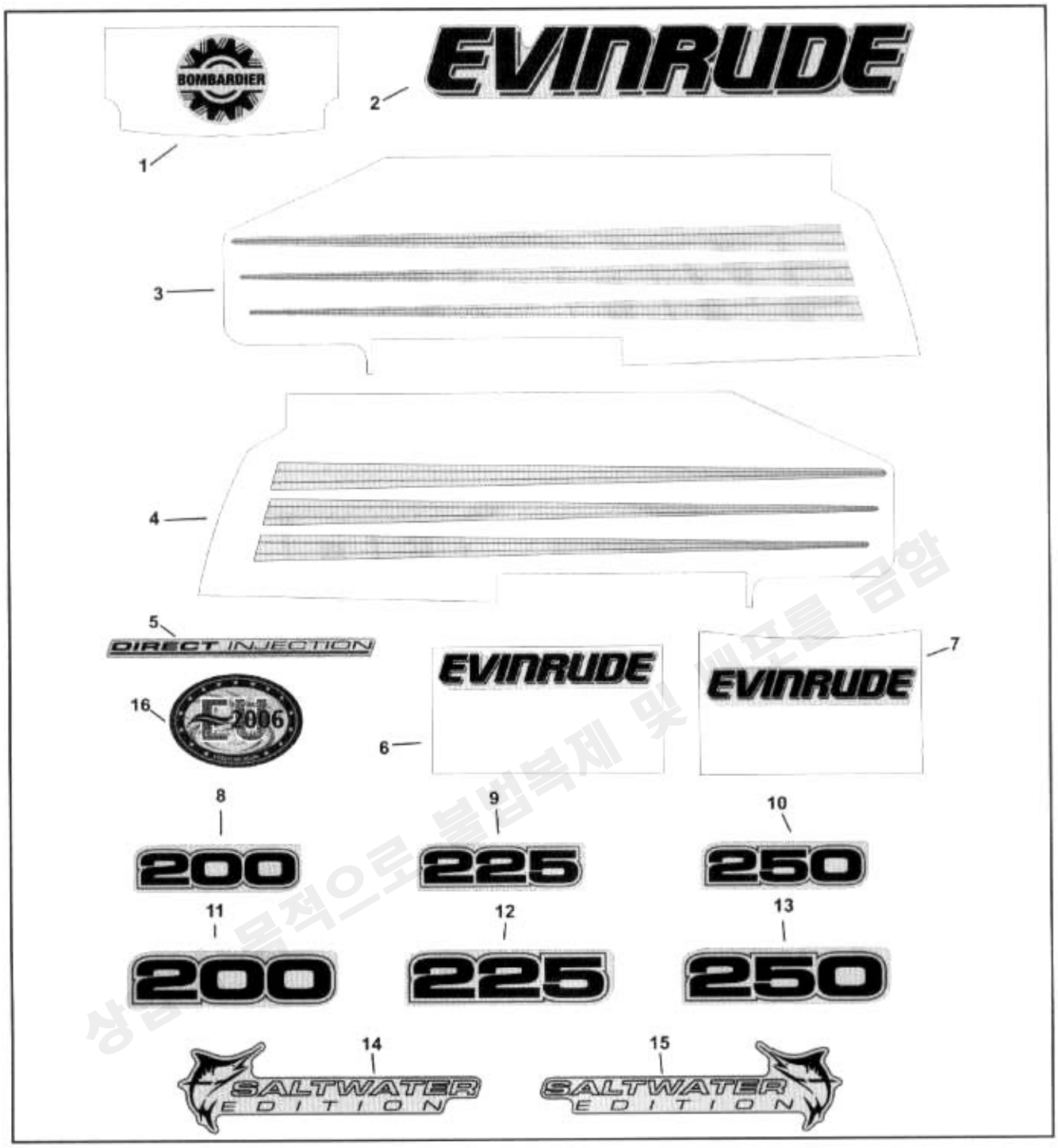

EPC3412

Ref	P/N	Name of Part		Qty	Ref	P/N	Name of Part	Qty
1	215287	"BOMBARDIER" - Front/Rear	A	2	9	215283	"225" - Front	1
2	215275	"EVINRUDE" - Port/Stbd	A	2	10	215285	"250" - Front	1
3	215278	STRIPE - Stbd	A	1	11	215282	"200" - Rear	1
4	215277	STRIPE - Port	A	1	12	215284	"225" - Rear	1
5	215554	"DIRECT INJECTION" Port/Stbd	A	2	13	215286	"250" - Rear	1
6	215280	"EVINRUDE" - Rear	A	1	14	351237	"SALTWATER EDITION" - Stbd	1
7	215279	"EVINRUDE" - Front	A	1	15	351222	"SALTWATER EDITION" - Port	1
8	215281	"200" - Front		1	16	215558	"EVINRUDE EU2006"	1

A Included with **"ENGINE COVER Assy"**

DECALS - FHL & FHX MODELS

EPC3624

Ref	P/N	Name of Part		Qty	Ref	P/N	Name of Part	Qty
1	215317	"BOMBARDIER" - Front/Rear	*A*	2	5	215322	"200 H.O." Front/Rear	2
2	215320	"EVINRUDE" - Port	*A*	1	6	215318	"225 H.O." Front/Rear	2
3	215319	"EVINRUDE" - Stbd	*A*	1	7	215558	"EVINRUDE EU2006"	1
4	215556	"DIRECT INJECTION" Port/Stbd	*A*	2				

A Included with **"ENGINE COVER Assy"**

EPC3646

Ref	P/N	Name of Part	Qty
1	776290	DECAL SET, Flag	1
2	215320	*DECAL, Flag and logo - Port	1
3	215319	*DECAL, Flag and logo - Stbd	1
4	215317	*"BOMBARDIER", Front/Rear	2
5	215556	"DIRECT INJECTION" Port/Stbd	2
	776304	*SQUEEGE, Application - Not Shown	1

DECAL SET - "WHITE" MODELS (ACCESSORY)

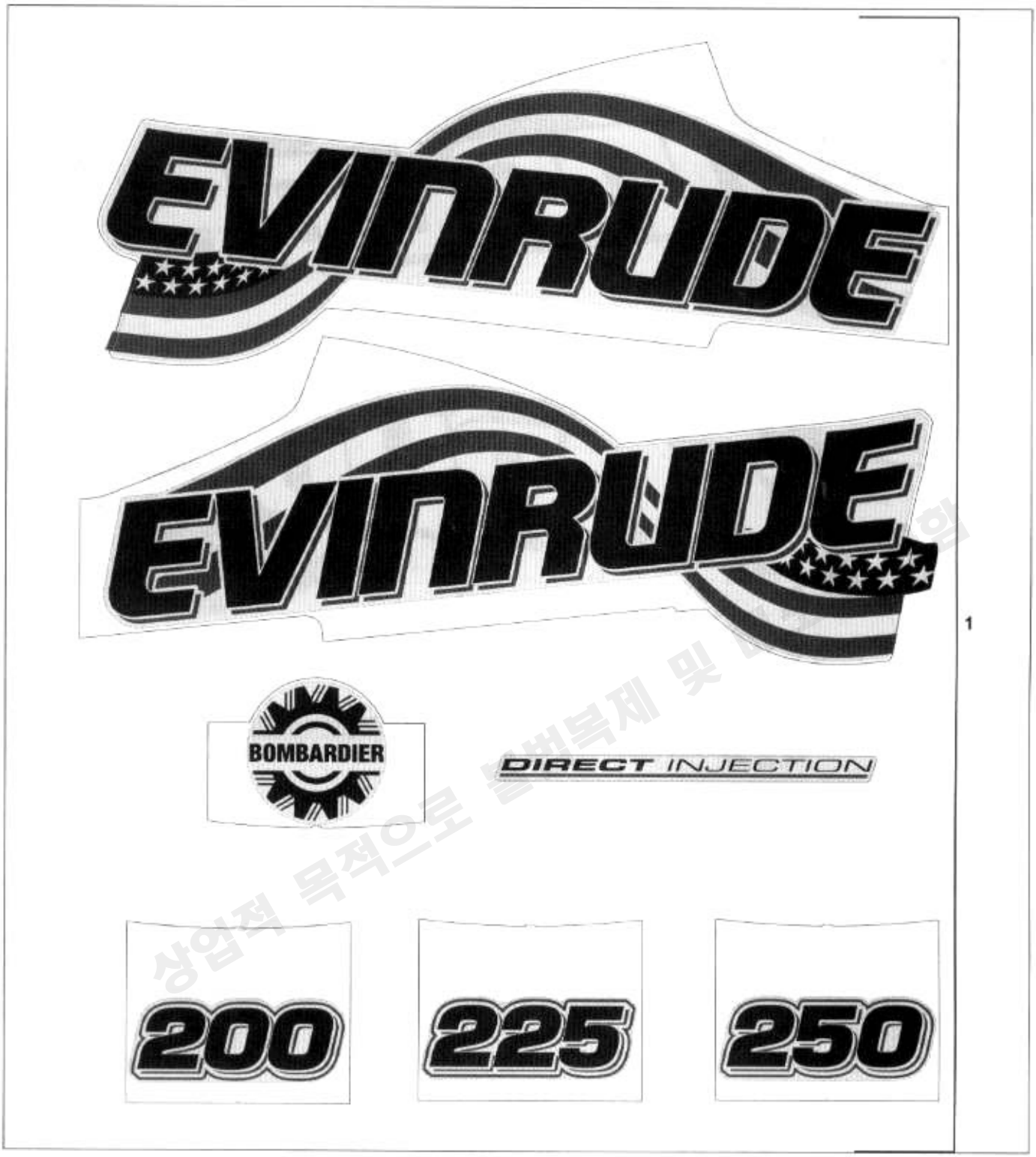

EPC3647

Ref	P/N	Name of Part	Qty
1	776293	DECAL SET, Flag	1
		Available as set only.	
	776304	*SQUEEGE, Application - Not Shown	1

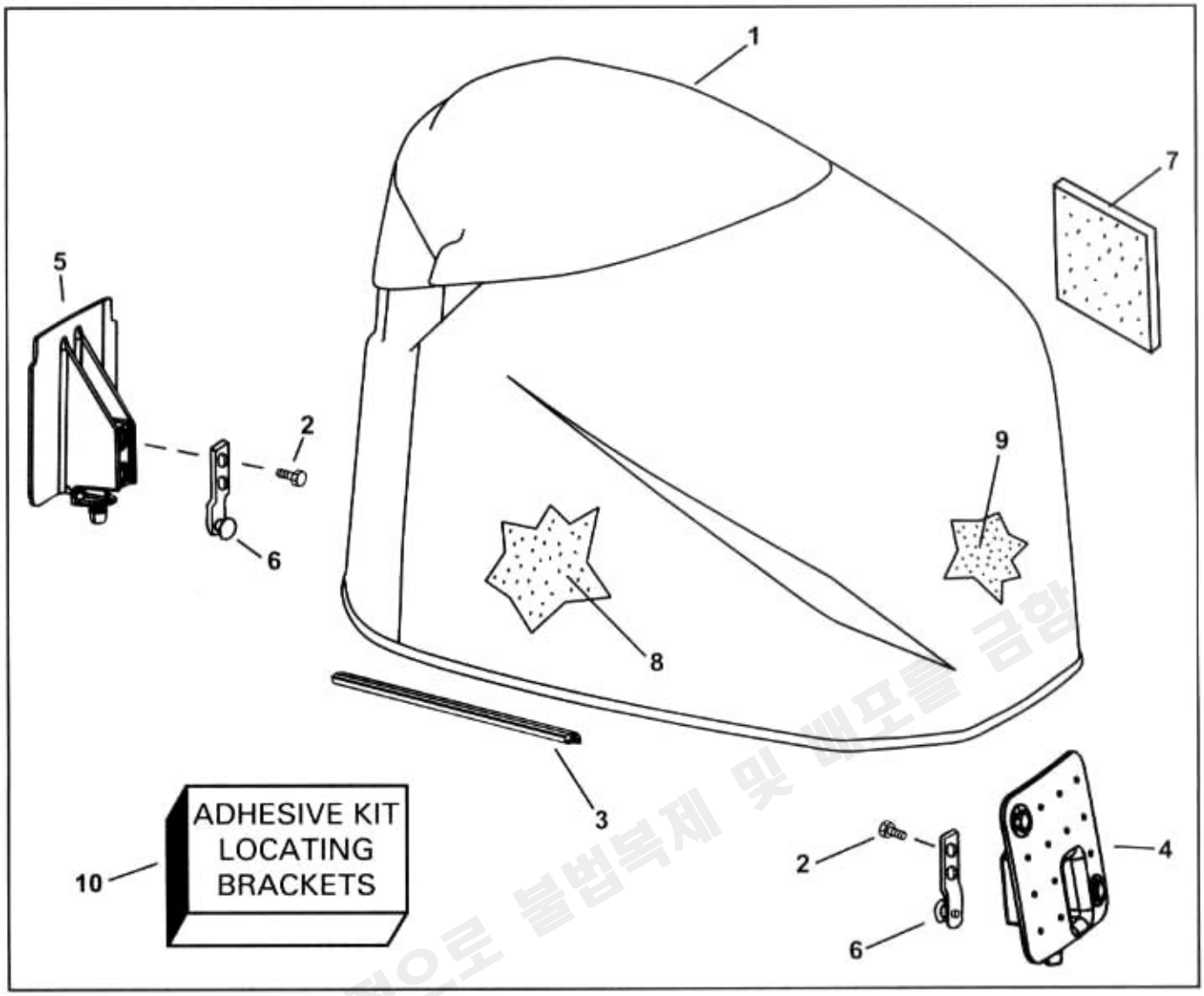

EPC3413

Ref	P/N	Name of Part		Qty	Ref	P/N	Name of Part	Qty
1	285613	ENGINE COVER Assy, **"WHITE"**	***A***	1	5	437393	*LATCH BRACKET, Rear	1
1	285625	ENGINE COVER Assy, **"BLUE"**	***A***	1	6	435716	*HOOK Assy	2
1	285624	ENGINE COVER Assy, **"BLUE"**	***A***	1	7	349280	*SOUND BLANKET, Port	1
		FHL, FHX Models only			8	348872	*SOUND BLANKET, Stbd	1
2	328744	*SCREW		4	9	349279	*SOUND BLANKET, Front	1
3	344813	*SEAL		1	10	431929	ADHESIVE KIT, Locating brackets	AR
4	346780	*LATCH BRACKET, Front		1				

A **IMPORTANT:** When ordering **"ENGINE COVER Assy"** also order appropriate **"HP"** decals.

상업적 목적으로 불법복제 및 배포를 금함

LOWER ENGINE COVER

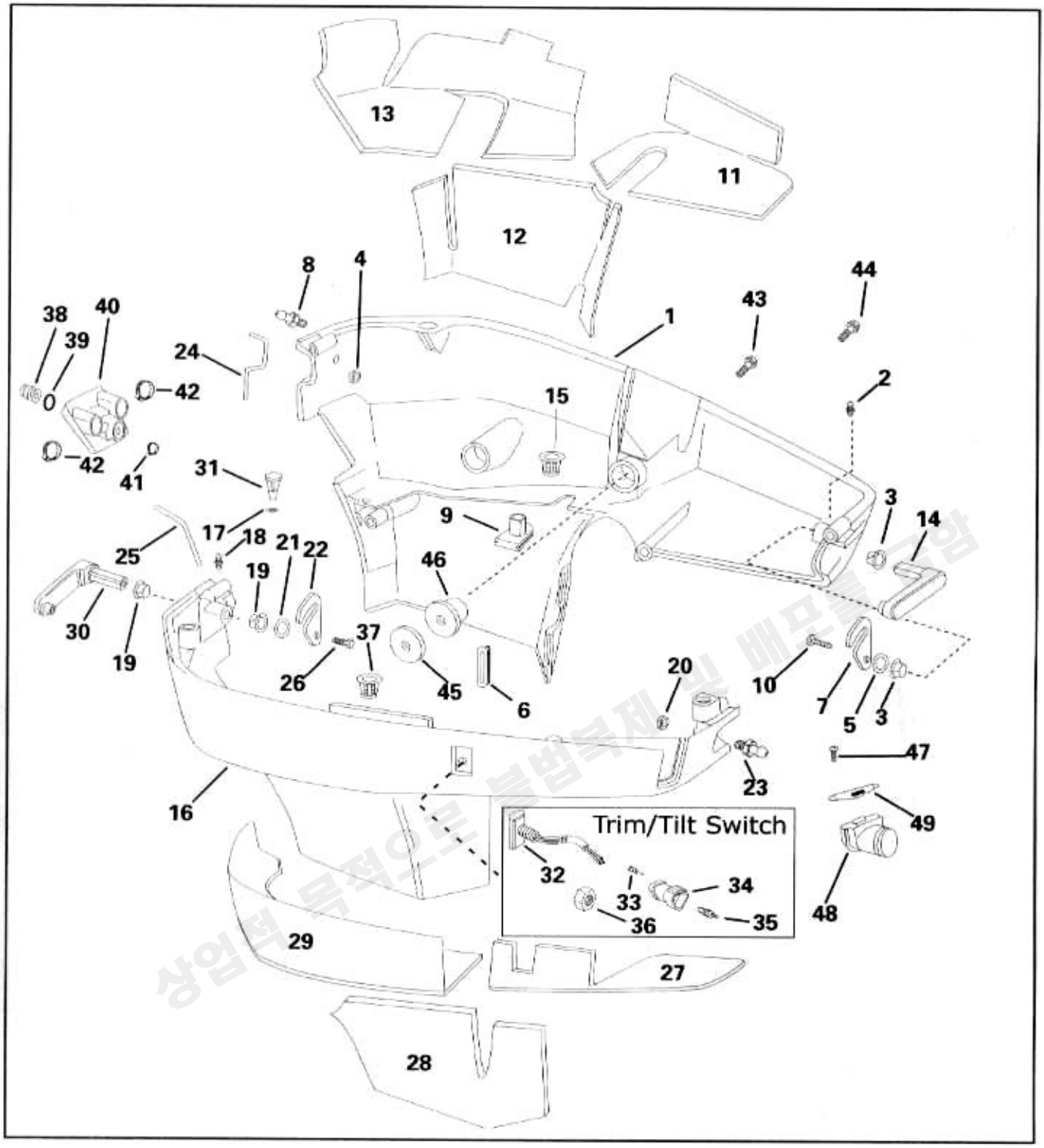

상업적 목적으로 불법복제 및 배포를 금함

EPC3058

Ref	P/N	Name of Part	Qty
1	5004979	COVER, Lower Assy-Port - BLUE	1
1	5004997	COVER, Lower Assy-Port - WHITE	1
2	307256	*FITTING, Lubrication	1
3	308532	*BUSHING, Latch handle	2
4	309485	*NUT, Screw, ball joint	1
5	330234	*WASHER, Spring - latch handle	1
6	330651	*BUMPER	2
7	337784	*HOOK, Latch	1
8	339575	*SCREW, Ball joint	1
9	341240	*GROMMET, Trim and Tilt leads	1
10	342191	*SCREW, Latch to handle	1
11	349434	*FOAM BARRIER, Front - Port	1
12	349438	*FOAM BARRIER, Center - Port	1
13	349649	*FOAM BARRIER, Rear - Port	1
14	435026	*LATCH HANDLE	1
15	5004576	*VALVE, Drain	1
16	5004980	COVER, Lower Assy-Stbd - BLUE	1
16	5004998	COVER, Lower Assy-Stbd - WHITE	1
17	202893	*O-RING, Check valve	1
18	307256	*FITTING, Lubrication	1
19	308532	*BUSHING, Latch handle	2
20	309485	*NUT, Screw, ball joint	1
21	330234	*WASHER, Spring - latch handle	1
22	337784	*HOOK, Latch	1
23	339575	*SCREW, Ball joint	1
24	341015	*SEAL,LOWER - Rear upper	1
25	341016	*SEAL,LOWER - Rear lower	1
26	342191	*SCREW, Latch to handle	1
27	349435	*FOAM BARRIER, Front - Stbd	1
28	349439	*FOAM BARRIER, Center - Stbd	1
29	349650	*FOAM BARRIER, Rear - Stbd	1
30	435026	*LATCH HANDLE	1
31	436048	*CHECK VALVE Assy	1
32	586074	*SWITCH, Trim and Tilt	1
33	514679	**TERMINAL, Pin	3
34	514686	**CONNECTOR, 3-pin	1
35	514682	**LOCK WEDGE	1
36	334656	*NUT, Switch	1
37	5004576	*VALVE, Drain	1
38	436726	PLUG, Overboard indicator	1
39	301967	O-RING, Overboard indicator	1
40	345586	GROMMET Assy	1
41	349759	CLAMP, 31.6mm	1
42	349729	CLAMP, 41.0mm	2
43	337574	SCREW, Lower cover, lower	2
44	325115	SCREW, Lower cover, upper	2
45	349556	WASHER, Mount	4
46	349557	MOUNT, Lower cover	4
47	308743	SCREW, Bracket, grommet	2
48	342290	GROMMET, Control cable entry	1
49	341099	BRACKET, Grommet to cover	1

상업적 목적으로 불법복제 및 배포금지

ENGINE ELECTRICAL HARNESS ASSEMBLY

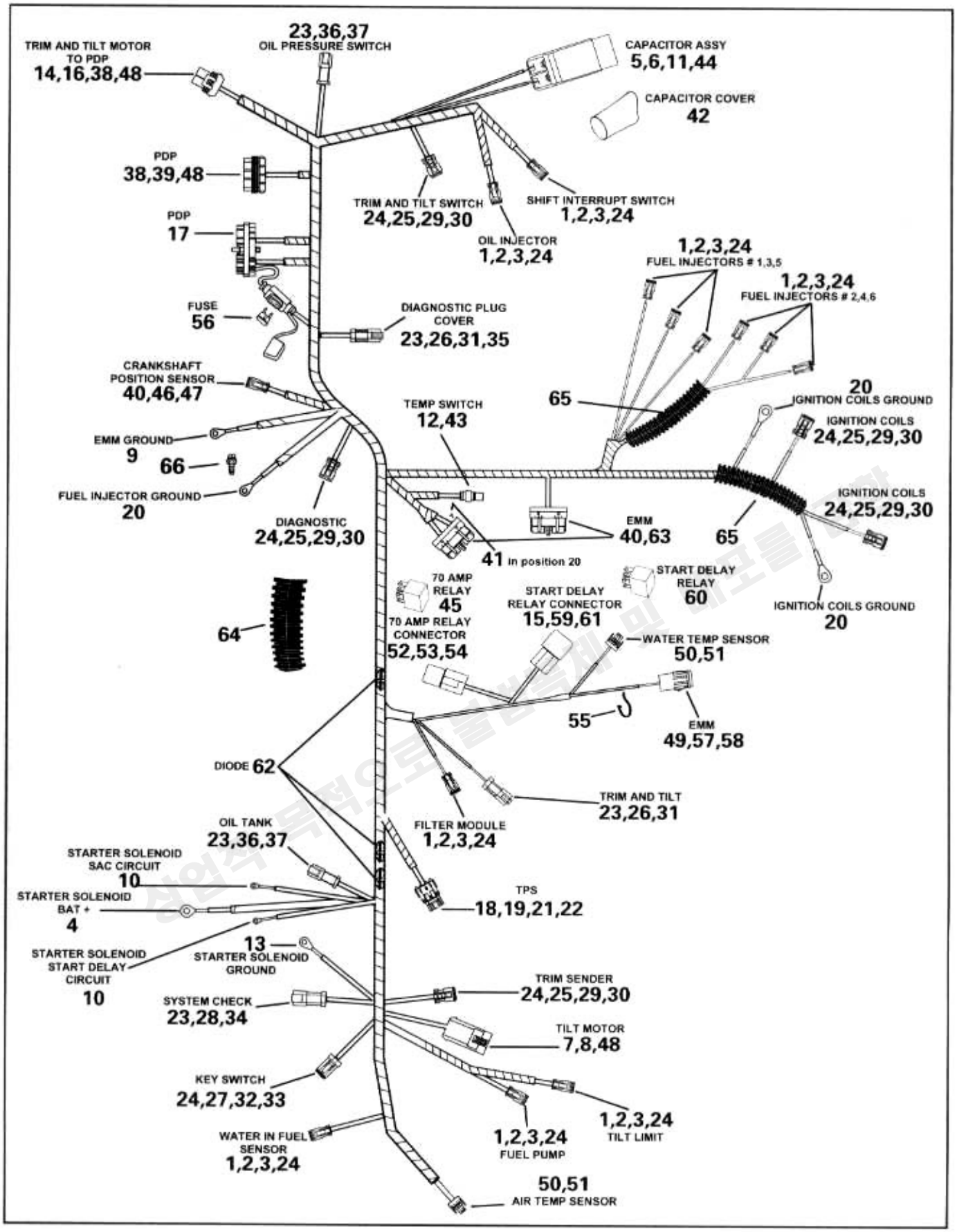

EPC3059

Ref	P/N	Name of Part	Qty
	586727	ENGINE HARNESS Assy	1
1	127287	*LOCK WEDGE, 2-socket	12
2	176295	*CONNECTOR, 2-Socket	12
3	514788	**SEAL, 2-Socket	12
4	204053	*RING TERMINAL, Solenoid Bat +	1
5	327283	*LOCK WASHER, Capacitor screw	4
6	332067	*SCREW, Capacitor	2
7	3010484	*CONNECTOR, Trim motor	1
8	3010485	*TERMINAL	2
9	510818	*RING TERMINAL, EMM Ground	1
10	511829	*RING TERMINAL	2
11	512550	*RING TERMINAL, Capacitor	2
12	513356	*CONNECTOR, Temperature switch	1
13	204363	*RING TERMINAL, Str solenoid grd	1
14	3010049	*CONNECTOR, TNT motor to PDP	1
15	511866	*CONNECTOR, Start delay	1
16	3010050	*SECONDARY LOCK	1
17	513439	*TERMINAL, Socket	14
18	513773	*TERMINAL, Pin-TPS	3
19	514485	*SEAL, Wire	3
20	600138	*RING TERMINAL-Ground	3
21	514591	*CONNECTOR, TPS	1
22	3010398	**SEAL, TPS connector	1
23	514679	*TERMINAL, Pin	14
24	514680	*TERMINAL, Socket	45
25	514681	*LOCK WEDGE, 3-socket	5
26	514682	*LOCK WEDGE, 3-pin	2
27	514683	*LOCK WEDGE, 6-socket	1
28	514684	*LOCK WEDGE, 6-pin	1
29	514685	*CONNECTOR, 3 Socket	5
30	514789	**SEAL	5
31	514686	*CONNECTOR, 3 Pin	2
32	514687	*CONNECTOR, 6-socket	1
33	514790	**SEAL, 6-Socket	1
34	514688	*CONNECTOR, 6-pin	1
35	514690	*PLUG, Vacant hole	2
36	514696	*CONNECTOR, 2-pin	2
37	514697	*LOCK WEDGE, 2-pin	2
38	514823	*TERMINAL	6
39	514824	*CONNECTOR, 4-socket	1
40	514856	*TERMINAL	49
41	514858	*PLUG, Vacant hole	1
42	514889	*COVER, Capacitor	1
43	581656	*TERMINAL, Socket	1
44	3010206	*CAPACITOR	1
45	586397	*RELAY, 70 AMP	1
46	3010593	*CONNECTOR, CPS	1
47	3010594	*LOCK WEDGE, CPS	1
48	3010023	*SEAL, Terminal	8
49	513667	*TERMINAL, Receptacle	2
50	3010124	*CONNECTOR, 2-Pin	2
51	3010125	*TERMINAL, Socket	4
52	3010126	*CONNECTOR, Relay	1
53	3010128	*TERMINAL, Receptacle	2
54	3010129	*TERMINAL, Receptacle	2
55	317893	TIE STRAP	4
56	514768	*FUSE, 20 AMP	1
57	513664	*CONNECTOR, 2 Connector, EMM	1
58	513665	*SEAL	1
59	513166	*TERMINAL, Receptacle	2
60	586224	*RELAY, Start delay	1
61	513167	*TERMINAL, Receptacle	2
62	583898	*DIODE KIT	3
63	514740	*CONNECTOR - 24 pin	2
64		*TUBING, Convoluted Cut to length from, P/N 3010592	
65		*TUBING, Convoluted Cut to length from, P/N 3010608	
66	335200	SCREW, Ground leads to c/c	1

상업적 목적으로 불법복제 금지

ELECTRICAL SYSTEM

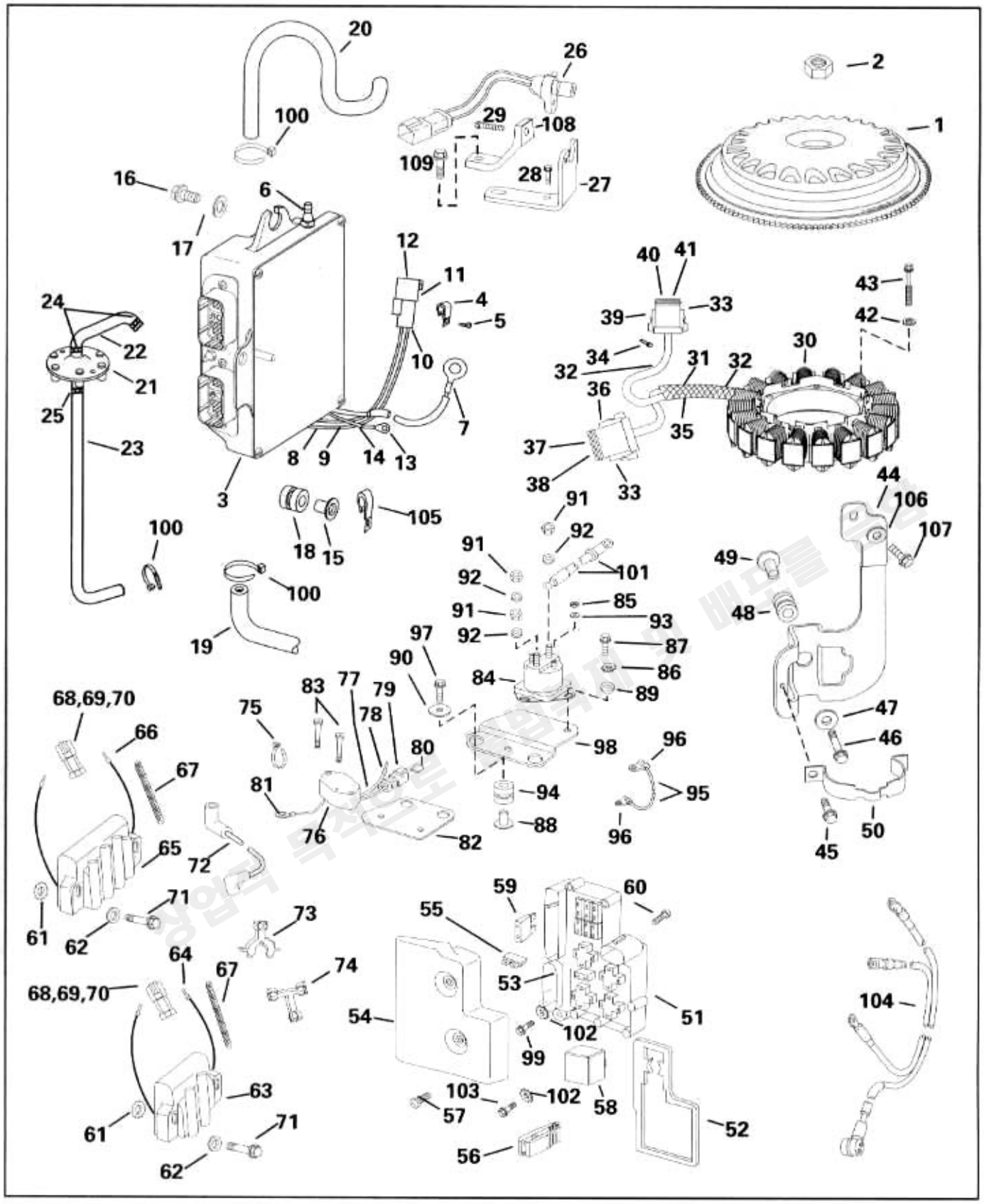

EPC3060

Ref	P/N	Name of Part	Qty
1	586653	FLYWHEEL Assy	1
2	326042	NUT, Flywheel	1
3		EMM, 200HP - Call Dealer Support Services	1
3		EMM, 225HP - Call Dealer Support Services	1
3		EMM, 250HP - Call Dealer Support Services	1
4	316245	*CLAMP, leads to case	1
5	328714	*SCREW, Clamp to EMM	1
6	330272	*FITTING, EMM water	2
7	204363	*TERMINAL, Ring - ground	1
8	317893	*TIE STRAP	3
9	320107	*TIE STRAP	1
10	513663	*CONNECTOR, 2 Socket	1
11	513665	*PLUG, Seal	1
12	513666	*TERMINAL, Blade	2
13	514158	*TERMINAL, Ring	1
14	5004456	*FUSIBLE LINK KIT, AUX BATTERY	1
15	338558	SPACER, Flanged, EMM mount	4
16	333710	SCREW, EMM	4
17	328703	WASHER, EMM	4
18	333040	ISOLATOR, EMM	4
19	347034	HOSE, Vapor separator to EMM	1
20	350136	HOSE, EMM to cover plate	1
21	5001347	DIAPHRAGM & HOSE Assy, Exhaust	1
22	339746	*HOSE, Diaphragm to EMM	1
23	350338	*HOSE, Exh pressure to diaphragm	1
24	346930	*CLAMP, 9.5mm	1
25	346931	*CLAMP, 14mm	1
26	586452	SENSOR Assy, Crank position	1
27	346466	BRACKET, CPS	1
28	328725	SCREW, CPS mount	1
29	329217	SCREW, CPS to bracket	1
30	586571	STATOR Assy	1
31	317893	*TIE STRAP	3
32	320107	TIE STRAP	8
33	514680	*TERMINAL, Socket	18
34	514690	*PLUG, Seal	2
35	3010861	*SLEEVE	1
36	3010885	*CONNECTOR, 12 Pin	1
37	3011034	**SEAL	1
38	3010959	*LOCKWEDGE, 12 Pin	1
39	3011030	*CONNECTOR, 8 Pin	1
40	3011033	**SEAL	1
41	3011031	*LOCKWEDGE, 8 Pin	1
42	306311	LOCK WASHER, Stator screw	6
43	343525	SCREW, Stator mounting	6
44	347236	BRACKET, Capacitor	1
45	332226	SCREW, Clamp to bracket	1
46	333710	SCREW, Capacitor mount bracket	1
47	328703	WASHER	1
48	333040	ISOLATOR	1
49	338558	SPACER, Flanged	1
50	514891	CLAMP, Capacitor	1
51	586754	POWER DISTRIBUTION PANEL	1
52	345004	*SEAL, Cover	1
53	3853299	*GASKET, Connector	1
54	586300	*COVER Assy	1
55	514766	**FUSE, 10 AMP, spare	2
56	345005	**FUSE, Puller	1
57	344233	**SCREW	2
58	586224	*RELAY Assy	4
59	514766	*FUSE, 10 AMP	7
60	328649	SCREW, Fuse & relay to bracket	5
61	328701	LOCK WASHER, Coil	8
62	328703	FLAT WASHER, Coil mounting	8
63	586749	COIL Assy, Single	2
64	514679	*TERMINAL, Pin	2
65	586745	COIL Assy, Dual	2
66	514679	*TERMINAL, Pin	4
67		**TUBING, Sleeve - Primary leads Cut to length from P/N 3011044	
68	514682	LOCKWEDGE	2
69	514686	CONNECTOR, 3 Pin	2
70	514789	*SEAL	2
71	331025	SCREW, Coil mounting	8
72	5004960	LEAD Assy, Spark plug	6
73	350056	RETAINER, High tension leads / injector	12
74	350055	RETAINER, High tension leads	6
75	318322	TIE STRAP	AR
76	586546	MODULE, Filter	1
77	317893	*TIE STRAP	1
78	514679	*TERMINAL, Pin	2
79	514696	*CONNECTOR, 2 Pin	1
80	514697	*LOCKWEDGE, 2 Pin	1
81	510818	*TERMINAL, Ring	1
82	349993	BRACKET, Filter assy to c/c	1
83	324334	SCREW, Filter assy to bracket	2
84	586842	SOLENOID	1
85	306556	NUT, Small	2
86	328701	LOCK WASHER	1
87	335200	SCREW, Solenoid	2
88	338558	SPACER, Solenoid bracket	2
89	328703	WASHER, Solenoid bracket	2
90	328701	WASHER, Solenoid	2
91	321472	NUT, Large	3
92	331259	LOCK WASHER, Large	3
93	304454	LOCK WASHER, Small	2
94	333040	ISOLATOR, Solenoid bracket	1
95	376349	LEAD, Solenoid ground	1
96	514158	*TERMINAL, Ring	2
97	324334	SCREW, Solenoid bracket	2
98	346784	BRACKET, Solenoid	1
99	335200	SCREW, Auxiliary battery lead	1
100	320107	TIE STRAP	AR
101	386721	LEAD, Solenoid to starter	1
102	303701	LOCK WASHER	2
103	332226	SCREW, Neg bat lead to PDP brkt	1
104	584348	BATTERY CABLE	1
105	330151	CLAMP, EMM hose & wires	1
106	303701	LOCKWASHER	1
107	332226	SCREW, Bracket to c/c	1
108	350936	BRACE, CPS	1
109	328725	SCREW, Brace to bracket	1

FUEL COMPONENTS

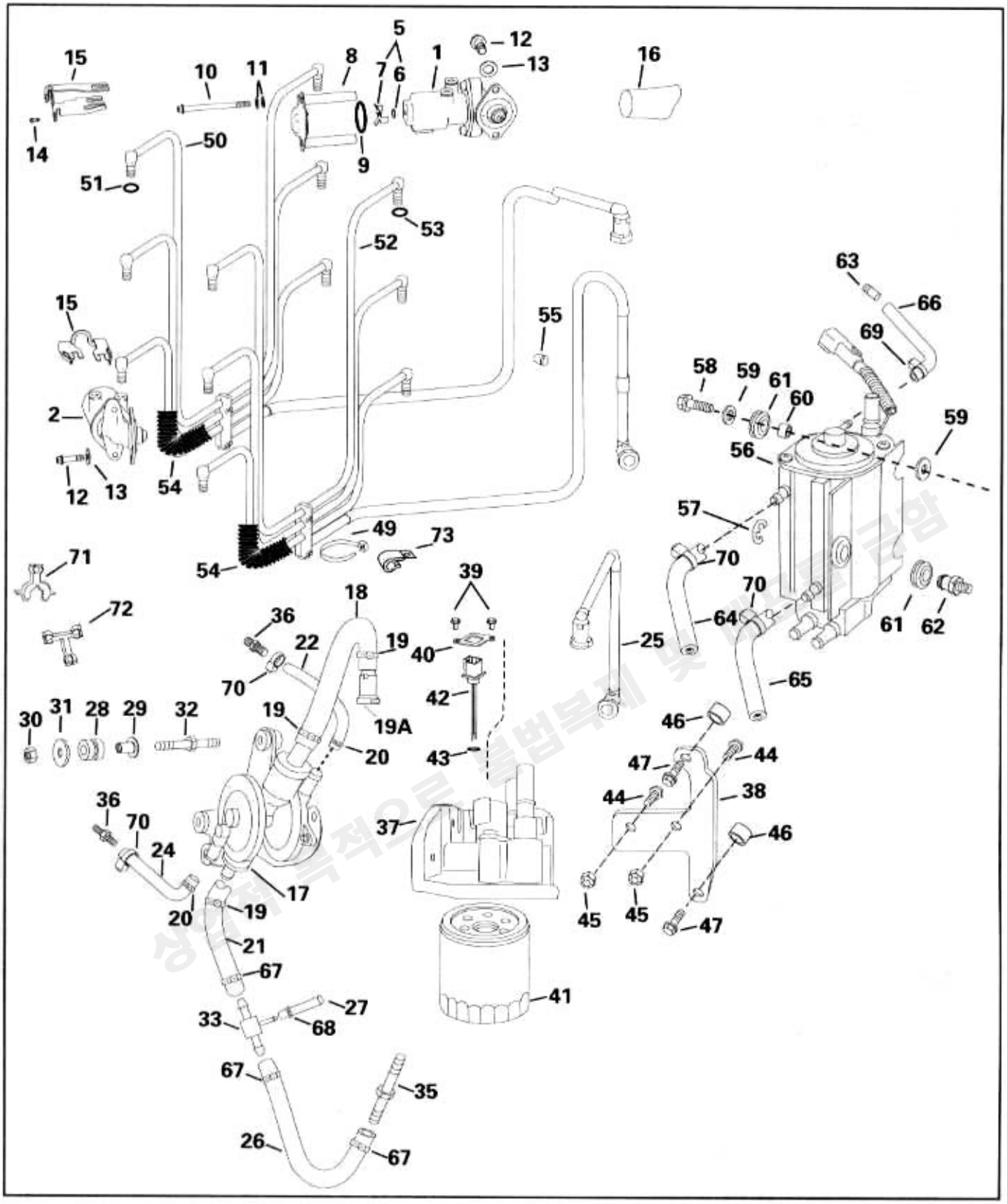

EPC3061

Ref	P/N	Name of Part	Qty
1	5005196	INJECTOR Assy, Port	3
2	5005197	INJECTOR Assy, Stbd	3
5	5001911	*SPRING, BUTTON O-RING Assy	6
6	348496	**O-RING	1
7	5001901	**SPRING & BUTTON Assy	1
8	5004270	*CAP & Sleeve Assy	6
9	348107	*O-RING	6
10	349870	*SCREW, Injector to adaptor	12
11	348224	*WASHER, Injector to adaptor	24
12	349272	*SCREW, Injector to cyl head	12
13	318941	*WASHER, Injector to cyl head	12
14	349090	*SCREW	12
15	349080	RETAINER, Fuel line to injector	6
16	349424	SLEEVE, #1 Injector	1
17	5001513	LIFT PUMP Assy, Fuel	1
	5004687	*HOSE Assy, Pump to filter - Not Shown	
18	349511	**HOSE, Pump to filter	1
19	348839	**CLAMP, 17.0mm	2
19A	5005459	**CONNECTOR Assy	
20	346786	*CLAMP, 15.7mm	2
21	345714	*HOSE, Tee to pump	1
22	345612	*HOSE, Upper c/c pulse	1
24	331683	*HOSE, Lower c/c pulse	1
25	439947	CONNECTOR & TUBE Assy, Filter	1
26		HOSE, Fuel in to tee 26 in. (66cm)	
		Cut to length from P/N 125115	
27		HOSE, Oil outlet to tee	1
		Cut to length from P/N 772571	
28	333040	ISOLATOR, Bracket mounting	3
29	338558	SPACER, Fuel bracket	3
30	313022	LOCKNUT	3
31	328703	WASHER, Lift pump bracket	3
32	345707	STUD	3
33	345701	TEE, Fuel inlet	1
35	348939	CONNECTOR, Fuel	1
36	345702	FITTING, Pulse hoses to c/c	2

Ref	P/N	Name of Part	Qty
37	5001252	FILTER HOUSING Assy, Fuel	1
38	345169	BRACKET, Filter housing to c/c	1
39	336481	*SCREW, Sensor retainer	2
40	344609	*RETAINER, Sensor	1
41	502906	*FILTER, Fuel	1
42	5001502	*WATER SENSOR Assy	1
43	3850819	**O-RING, Water sensor	1
44	332026	SCREW, Filter housing to bracket	2
45	313022	LOCKNUT	2
46	345756	SPACER, Bracket lift pump to c/c	2
47	333710	SCREW, Bracket lift pump to c/c	2
49	320107	TIE STRAP	1
50	5004986	*MANIFOLD Assy., Fuel feed	1
51	344828	**O-RING, Black	12
52	5005413	*MANIFOLD Assy., Fuel return	1
53	343585	**O-RING, Brown	12
54		TUBING, Convoluted	
		Cut to length from P/N 348472	
56	5004429	RESERVOIR & PUMP	1
57	510487	RETAINING RING	1
58	302325	SCREW, Vapor separator to block	2
59	328700	WASHER, Vapor separator mounting	4
60	335328	SPACER, Vapor separator	2
61	329518	GROMMET, Vapor separator mtng	3
62	344848	STUD, Vapor separator to block	1
63	324005	RESTRICTOR, 0.020" in. vent hose	1
64	347034	HOSE, Water in-separator	1
65	333395	HOSE, Water out-separator	1
66	345529	HOSE, Vapor sep- to intake, #4 vent	1
67	346150	CLAMP, 18.5mm	3
68	348838	CLAMP, 10.5mm	1
69	318322	TIE STRAP	AR
70	320107	TIE STRAP	AR
71	350055	RETAINER, High tension leads	6
72	350056	RETAINER, High tension leads / injector	12
73	314253	CLAMP, Fuel rail	1

상업적 목적으로 불법복제

OIL COMPONENTS

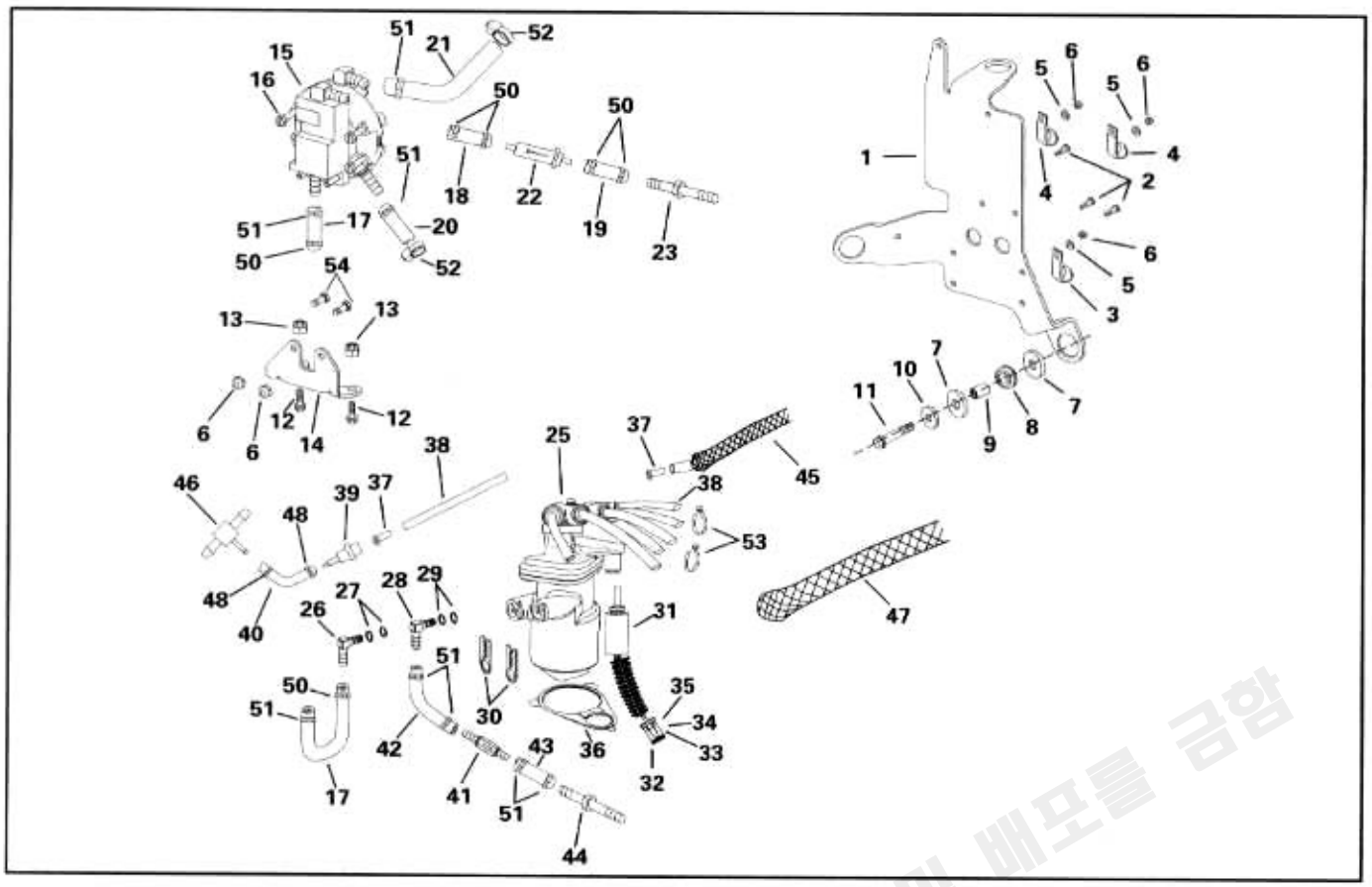

EPC3062

Ref	P/N	Name of Part	Qty
1	344636	BRACKET, Oil pump assy to c/c	1
2	328649	SCREW, Power distribution panel	4
3	348737	CLAMP, Oil hoses	1
4	348736	CLAMP, Oil hoses	2
5	328735	WASHER, Clamp screw	4
6	307999	NUT, Oil pump screw to bracket	6
7	331249	WASHER, Bracket grommet mount	6
8	329518	GROMMET, Bracket to c/c	3
9	335328	SPACER, Bracket grommet c/c	3
10	328700	WASHER, Bracket grommet mount	3
11	333710	SCREW, Bracket grommet mount	3
12	324334	SCREW, Injector to bracket	2
13	313022	NUT, Bracket to injector	2
14	346433	BRACKET, Oil pump to oil injector	1
15	5001222	OIL LIFT PUMP Assy	1
16	333675	SCREW, Pump to bracket	4
17	350266	HOSE, Pump to injector	1
18		HOSE, Oil to pump (6 in.) 152.4mm Cut to length from P/N 345448	
19		HOSE, Oil to filter (16 in.) 406.4mm Cut to length from P/N 345448	
20		HOSE, Oil pulse, lwr (9.4 in.) 239mm Cut to length from P/N 333341	
21	332911	HOSE, Oil pulse, upper	1
22	5004958	FILTER, Oil	1
23	349008	CONNECTOR, Oil supply	1
25	5004920	OIL INJECTOR & MANIFOLD Assy	1
26	5000911	FITTING, Oil injector inlet	1
27	344828	*O-RING, Inlet fitting	2
28	5000912	FITTING, Oil injector outlet Included with P/N 5004920	1
29	343585	*O-RING, Outlet fitting	2

Ref	P/N	Name of Part	Qty
30	345468	RETAINER, Injector fittings	2
31	5001234	SWITCH, Oil Pressure	1
32	127287	*LOCKWEDGE	1
33	176295	*CONNECTOR-2 Socket	1
34	514788	*SEAL	1
35	514680	*TERMINAL, Socket	2
36	346889	RETAINER, Switch	1
37	349898	SUPPORT, Hose	8
38		HOSE, Oil - blue translucent Cut to length from P/N 344249 (**IMPORTANT** - See service manual for proper installation)	
39	5001110	CHECK VALVE	1
40		HOSE, Check valve to tee fitting Cut to length from P/N 327228 (13 in.) 330mm	
41	5001054	PRESSURE REGULATOR Included with P/N 5004920	1
42	333407	HOSE, Injector to regulator Included with P/N 5004920	1
43		HOSE, Regulator to connector Cut to length from P/N 349105	
44	348841	CONNECTOR, Oil return	1
45	336269	BRAIDED SLEEVE, Port & Stbd	2
46	345701	FITTING, Tee	1
47	513817	BRAIDED SLEEVE	1
48	348838	CLAMP, 10.5mm	2
50	346785	CLAMP, 14.5mm	5
51	346786	CLAMP, 15.7mm	7
52	317893	TIE STRAP	2
53	317893	TIE STRAP	6
54	345356	SCREW, Oil pump to bracket	2

무단 복사 및 배포를 금함

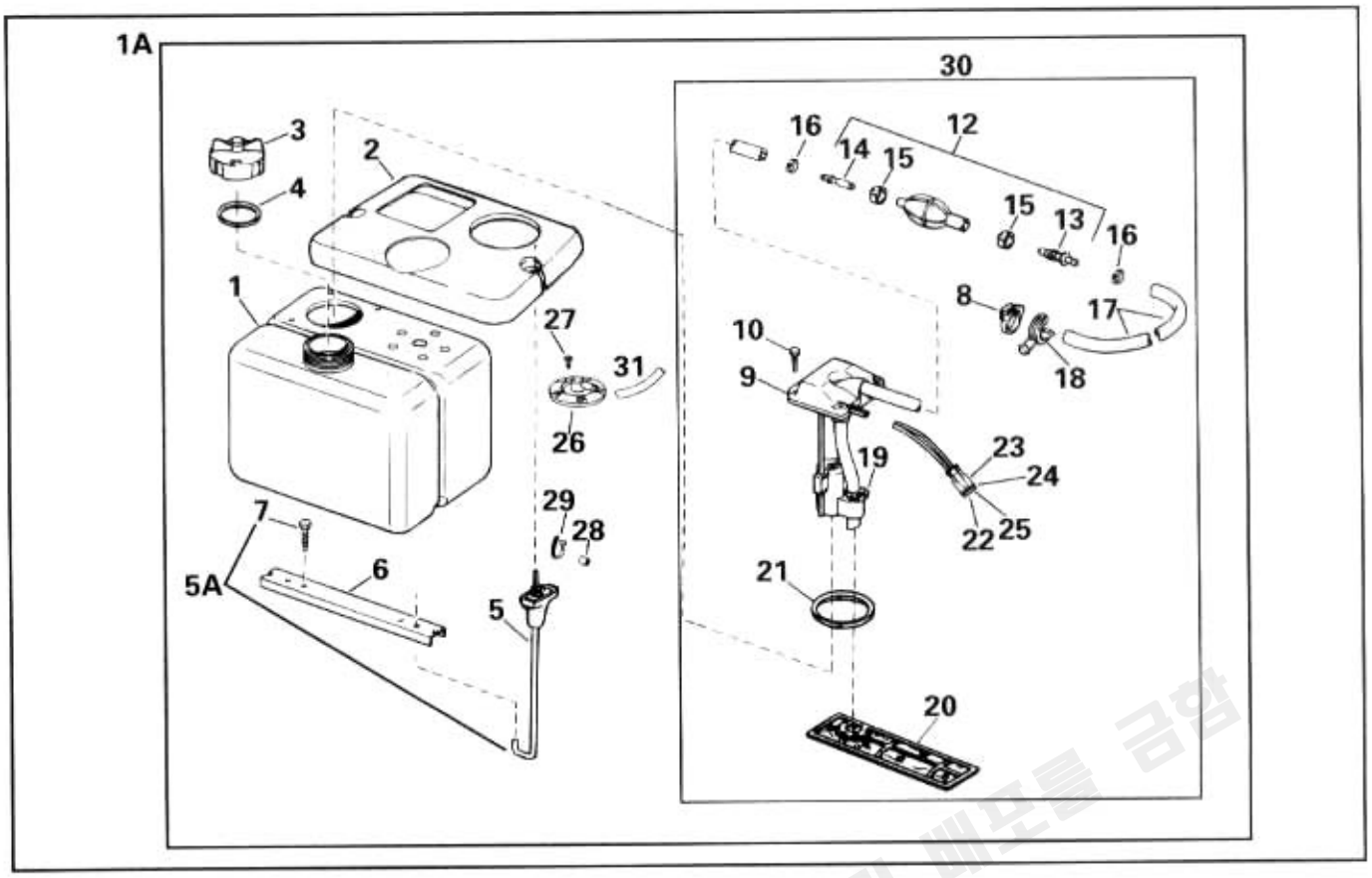

EPC3374

Ref	P/N	Name of Part		Qty
1A	176995	OIL TANK. Assy, 1.8 Gallon	*A*	1
1	176712	*OIL TANK		1
2	127670	*COVER, Oil tank		1
3	176217	*CAP ASSEMBLY		1
4	123231	**GASKET, Cap		1
5A	000862	*MOUNT KIT		1
5	175001	**ROD ASSEMBLY, Cover to bracket		2
6	124292	**MOUNTING BRACKET		1
7	124073	**LAG SCREW		2
8	322654	*CLAMP, Snap		1
9	176362	*OIL PICKUP ASSEMBLY		1
10	124485	**SCREW, Pickup Assy. to tank		4
12	175985	**PRIMER BULB ASSEMBLY		1
13	436145	***NIPPLE & VALVE Assy., Outlet		1
14	436191	***NIPPLE & VALVE Assy., Inlet		1
15	553166	***CLAMP, Band, Large		2
16	126945	**CLAMP, Band, small		2

Ref	P/N	Name of Part	Qty
17		**HOSE, 180 in. (4.6m)	1
		Cut to Length from P/N 345448 - 1/4 in. I.D.	
18	329661	**HOLDER, Plug	1
19	322654	**CLAMP, Snap	1
20	174377	**FILTER ASSEMBLY, Oil	1
21	126793	**SEAL, Pickup Assy. to tank	1
22	514680	**TERMINAL, Pin	2
23	176295	**CONNECTOR, 2-pin	1
24	514788	***SEAL, 2-socket	1
25	127287	**LOCK WEDGE, 2-socket	1
26	176724	*OIL RETURN ASSEMBLY	1
27	125529	**SCREW	5
28	315391	*PLUG	1
29	320107	*TIE STRAP	1
30	176362	OIL TANK PICKUP KIT	1
31		HOSE, OIL RETURN	AR
		Cut to Length from P/N 778711 - 5/16 in. I.D.	

A Additional tanks available 3.0 Gallon P/N 176996, 10 Gallon Tank P/N 776580

무단 불법복제 및 배포를 금함

INTAKE MANIFOLD

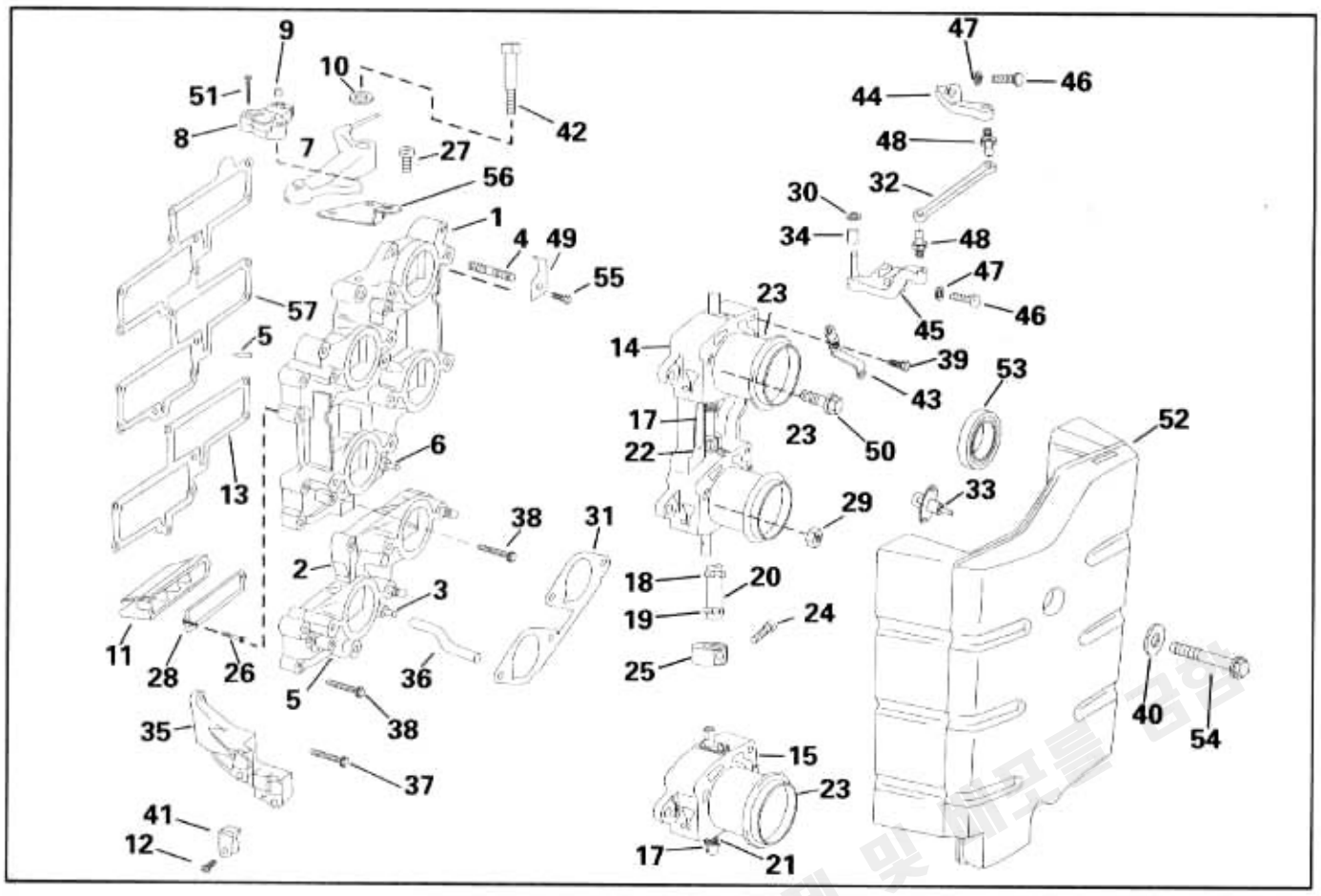

EPC3063

Ref	P/N	Name of Part	Qty
1	5000886	INTAKE MANIFOLD Assy, Upper	1
2	5000887	INTAKE MANIFOLD Assy, Lower	1
3	325659	*FITTING	2
4	314616	*STUD	6
5	345705	*FITTING, Recirc to intake manifold	6
6	349181	FITTING, Upper mfld to vap sep	1
7	347254	THROTTLE CAM	1
8	5001770	SENSOR, Throttle position	1
9	346040	*CAP, Throttle position	1
10	127386	WASHER, Throttle cam	1
11	5000323	REED BOX Assy	6
12	328725	SCREW, Trunnion cover	2
13	331532	GASKET, Lower intake manifold	1
		Included in POWERHEAD GASKET SET	
14	5004642	THROTTLE BODY, Upper	2
15	5004643	THROTTLE BODY, Lower	2
17	303261	*ROLL PIN	4
18	346785	*CLAMP, 14.5mm	2
19	346786	*CLAMP, 15.7mm	2
20	348995	*HOSE, Shaft connection	2
21	335075	*SPRING, Lower	2
22	332254	*SPRING, Upper	2
23	344565	*ADAPTER, Air silencer	6
24	349724	*SCREW, Coupler upper to lower	2
25	348994	*COUPLER, Upper to lower	2
26	332265	SCREW, Reed box	12
27	335200	SCREW, Throttle cam bracket	1
28	332266	GASKET, Leaf plate	6
		Included in POWERHEAD GASKET SET	
29	316355	NUT, Throttle body to manifold	6
30	324678	O-RING, Roller	1
31	332319	GASKET, Throttle body	3
		Included in POWERHEAD GASKET SET	
32	341622	LINK, Shell	1
33	3010673	SENSOR, Air temperature	1
34	432639	ROLLER, Cam follower	1
35	341898	TRUNNION BLOCK	1
36	344783	HOSE, Air silencer drain	1
37	324430	SCREW, Block to manifold	2
38	319126	SCREW, Manifold, short	18
39	335200	SCREW, Bracket	2
40	340840	SEAL, Knob to air silencer	2
41	329271	COVER, Trunnion	2
42	347338	SCREW, Throttle cam	1
43	5000727	BRACKET, Air silencer	2
44	437687	LEVER Assy, Port	1
45	5004319	LEVER Assy, Starboard	1
46	349064	*SCREW	2
47	332609	*WASHER	2
48	339083	*BALL JOINT	1
49	343985	POINTER, Timing	1
50	317624	SCREW, Throttle body to manifold	6
51	306644	SCREW, Throttle sensor	2
52	439767	AIR SILENCER & SEAL	1
53	339581	*SEAL, Air silencer to throttle body	6
54	439922	KNOB Assy, Cover to throttle body	2
55	310379	SCREW, Timing pointer	1
56	347106	BRACKET, Throttle cam	1
57	328622	GASKET, Manifold upper to c/c	1
		Included in POWERHEAD GASKET SET	

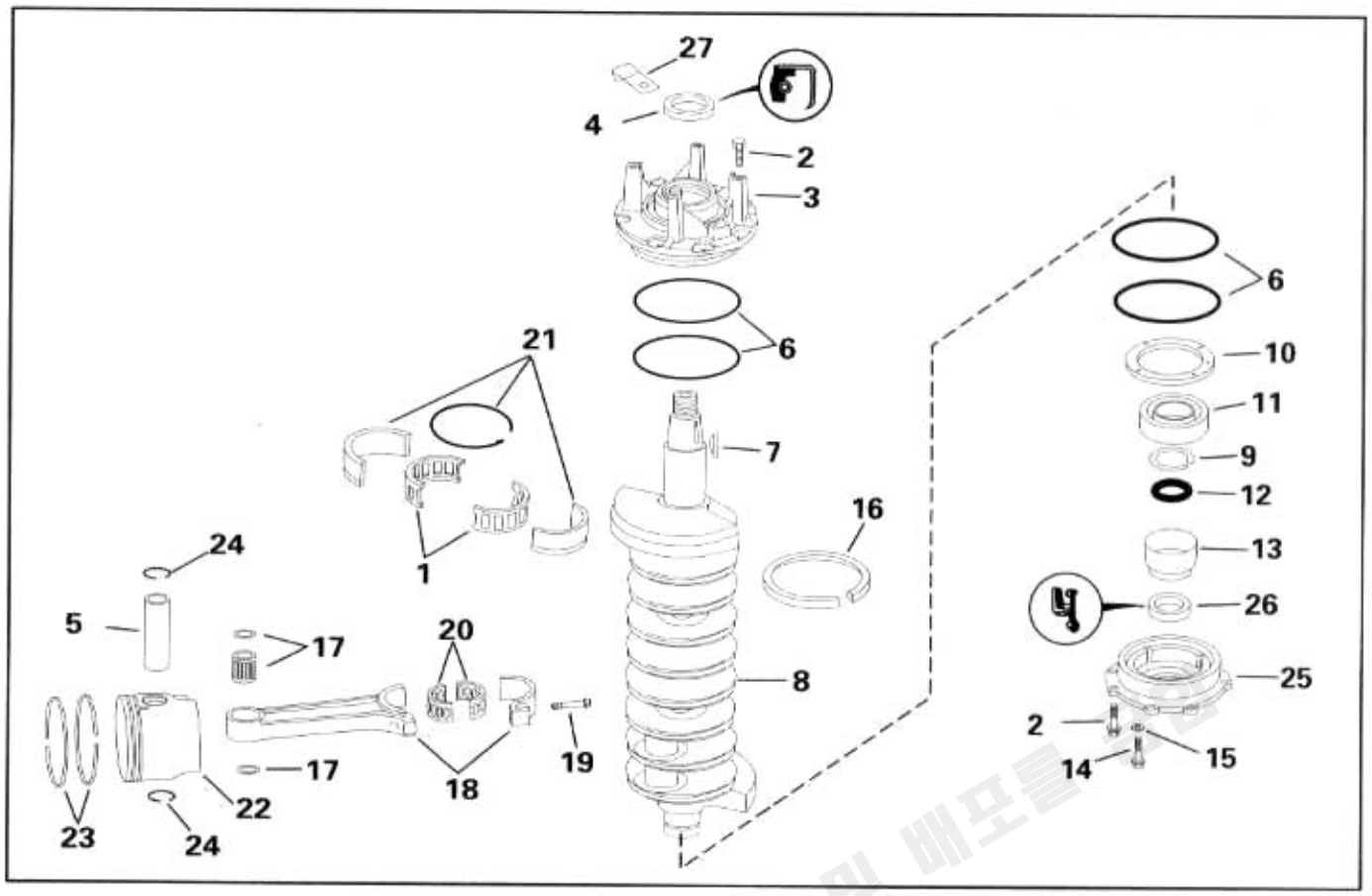

EPC3064

Ref	P/N	Name of Part	Qty
1	387041	RETAINER & NEEDLE SET	2
2	344020	SCREW, Crankcase head	16
3	5001115	HEAD Assy, Upper	1
4	339620	*SEAL, Upper	1
		Included in POWERHEAD GASKET SET	
5	326764	WRIST PIN	6
6	326741	O-RING, Bearing housing	4
		Included in POWERHEAD GASKET SET	
7	307480	KEY, Flywheel	1
8	434771	CRANKSHAFT Assy	1
9	326047	*RING, Retaining, bearing	1
10	326748	*PLATE, Lower bearing	1
11	390641	*BEARING, Ball	1
12	337087	*O-RING, Sleeve	1
		Included in POWERHEAD GASKET SET	
13	336988	*SLEEVE, Crankshaft	1
14	332590	SCREW, Lower bearing retainer	4
15	332585	*SEAL	4
16	326749	SEAL RING	9
17	348495	BEARING, Wrist pin	6
18	5000643	ROD Assy, Connecting	6
19	346044	*SCREW, Rod cap	2
20	396041	RETAINER SET	6
21	320499	SPLIT SLEEVE, Center bearing	2
22	5005243	PISTON & RING Assy, Port - Standard	3
22	5005244	PISTON & RING Assy, Stbd - Standard	3
23	5005046	*RING SET, Standard	6
22	5005247	PISTON & RING Assy, Port - OS 0.020in.	3
22	5005248	PISTON & RING Assy, Stbd - OS 0.020in.	3
23	5004935	*RING SET, Oversize - 0.020in.	6
24	326765	*RETAINING RING	12
25	434792	CRANKCASE HEAD Assy, Lower	1
26	332942	*SEAL	1
		Included in POWERHEAD GASKET SET	
27	316487	RETAINER, Throttle sensor lead	1

CYLINDER & CRANKCASE

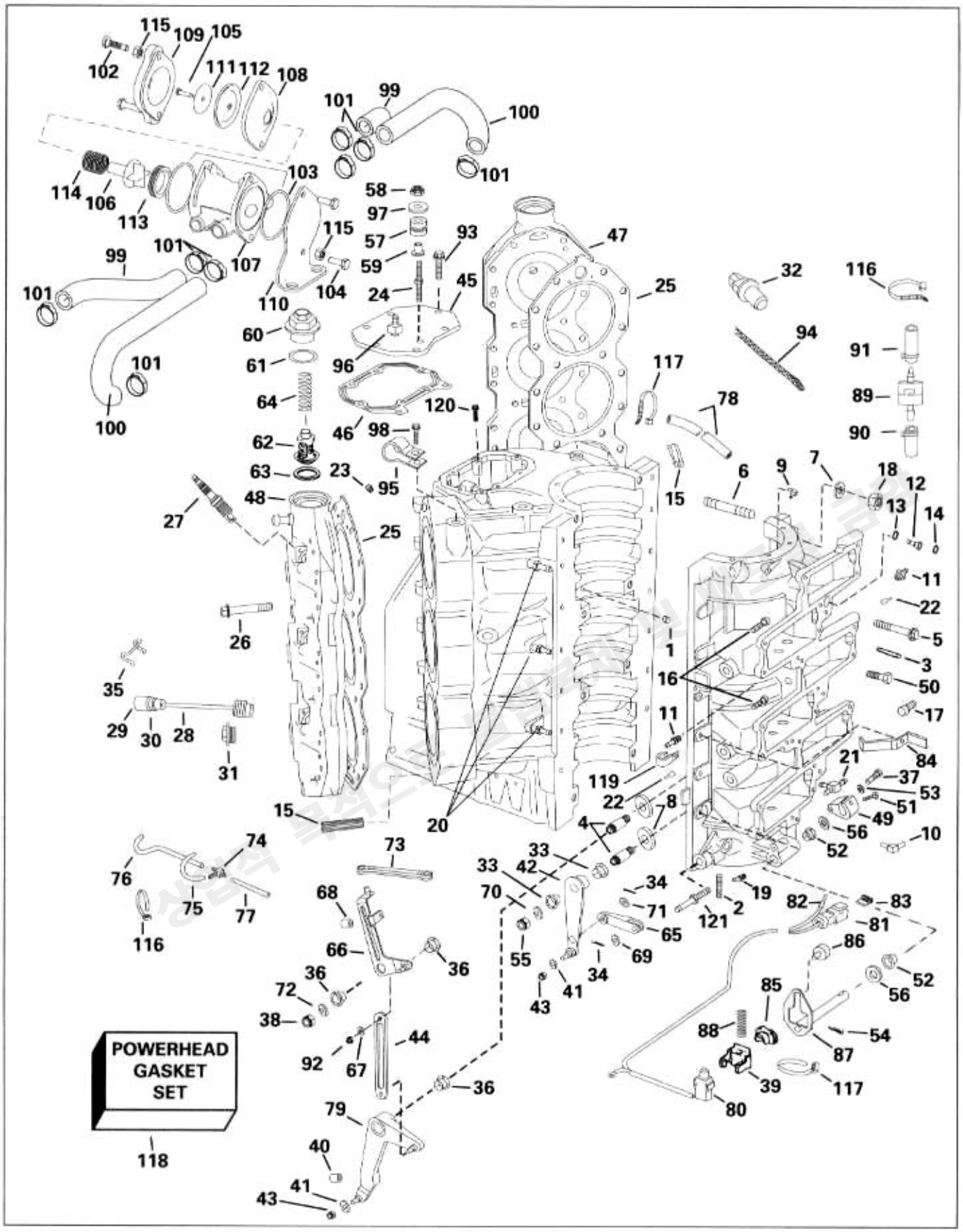

EPC3065

Ref	P/N	Name of Part	Qty
	5004930	200 HP CYL & CRANKCASE Assy	1
	5001488	225/250 HP CYL & CRANKCASE Assy	1
1	304178	*PIN, Dowel bearing	2
2	314616	*STUD, Crankcase to adapter	2
3	331095	*PIN, Taper	2
4	338653	*STUD, Shift & throttle levers	3
5	914024	*SCREW, Cylinder to crankcase	6
6	348843	*STUD, Cylinder to crankcase	2
7	330265	*WASHER, Stud c/c	2
8	320744	*WASHER, Stud, shift & throttle levers	3
9	321598	*FITTING, Drain, Upper Main	1
10	348471	*FITTING Drain, Lower Main	1
11	436194	*CHECK VALVE, Recirculation	6
12	436385	*CHECK VALVE Assy	6
13	324660	**O-RING, Large	1
14	340052	**O-RING, Small	1
15	346237	*WATER DAM	6
16	345702	*FITTING, Oil pump pulse	2
17	345702	*FITTING, Fuel pump pulse	2
18	332291	*NUT, Stud c/c	2
19	319253	*GREASE FITTING, Shift lever	1
20	5000477	*CHECK VALVE, Recirculation	6
21	345207	*TEE, Lower Bearing vent	1
22	344821	*NIPPLE, Oil inlet	6
23	332135	*PLUG, Water Pressure	1
24	344402	STUD, Water pressure relief valve	2
25	346007	GASKET, Cylinder head	2
26	345943	SCREW, Cylinder head	40
27	5001866	SPARK PLUG Champion *QC12PEP*	6
28	585038	TEMPERATURE SWITCH, Starboard	1
29	511469	*TERMINAL, Pin	1
30	513357	*CONNECTOR	1
31	329562	*COVER, Temperature switch	1
32	3010674	TEMPERATURE SENSOR, Port	1
33	308532	BUSHING, Shift arm	2
34	305650	COTTER PIN	2
35	512741	RETAINER, Temp switch connector	1
36	308532	BUSHING, Throttle levers	4
37	327590	PIN, Shift rod lever screw	1
38	315077	LOCKNUT, Throttle levers	2
39	513134	BRACKET, Shift assist	1
40	318660	BUMPER, Screw, throttle stop	1
41	328737	WASHER, Shift & throttle lever	2
42	433481	SHIFT ARM	1
43	328064	NUT, Throttle arm & shift lever	2
44	331224	LINK, Throttle levers	1
45	347318	COVER, Water plenum	1
46	344472	GASKET, Water plenum cover	1
47	5004931	CYLINDER HEAD, Port, 200	1
47	5001486	CYLINDER HEAD, Port, 225, 250	1
48	5004932	CYLINDER HEAD, Stbd, 200	1
48	5001487	CYLINDER HEAD, Stbd, 225, 250	1
49	335191	LEVER, Shift rod	1
50	324334	SCREW, Cylinder to crankcase	12
51	328695	SCREW, Lever shift rod	1
52	312708	BUSHING, Shift lever	2
53	302290	WASHER, Screw, shift lever	1
54	330145	COTTER PIN, Shift lever	1
55	315077	LOCKNUT, Shift arm	1
56	202026	WASHER, Shift lever	2
57	333040	ISOLATOR, Wtr pressure relief mount	2
58	313022	LOCK NUT, Wtr pressure relief mount	2
59	338558	SPACER, Flanged	2
60	344771	COVER, Thermostat	2
61	301917	O-RING, Thermostat cover	2
62	5001036	THERMOSTAT Assy	2
63	339299	SEAL, Thermostat to cyl head	2
64	345171	SPRING, Thermostat	2
65	331737	LINK, Shift lever	1
66	5001497	THROTTLE LEVER, Upper	1
67	328737	WASHER, Link	2
68	318660	CAP, Throttle stop, upper	1
69	328702	WASHER, Shift lever to link	1
70	330266	WASHER, Shift arm	1
71	328702	WASHER, Link to shift arm	1
72	330266	WASHER, Throttle levers	2
73	346912	LINK, Throttle	1
74	325569	TEE, Recirculation	4
75	345364	HOSE, Check valve to tee	4
76		HOSE, Tee to check valve Cut to length from, P/N 332219	
77		HOSE, Mfld to tee, 1.5 in. (38mm) Cut to length from, P/N 332219	
78		HOSE, #2 Check valve to - #1 intake, 17 in. (432mm) Cut to length from, P/N 332219	
79	5005094	THROTTLE LEVER, Lower	1
80	586437	SWITCH & CABLE	1
81	514679	*TERMINAL	2
82	514696	*CONNECTOR, 2-pin	1
83	514697	*LOCK WEDGE, 2-pin	1
84	334169	RETAINER	1
85	513811	BRACKET, Slider	1
86	331404	PIN	1
87	431908	SHIFT LEVER & SHAFT	1
88	333749	SPRING	1
89	348478	CHECK VALVE, Main bearing	1
90		HOSE, Lwr brg, 1.5 in. (38mm) Cut to length from, P/N 327228	1
91		HOSE, Check valve to upper brg hsg, 21.5 in. (546mm) Cut to length from, P/N 344249	2
92	328064	NUT, Link to throttle lever	2
93	335687	SCREW, Plate to c/c	3
94	513816	BRAIDED SLEEVE	1
95	511411	LOOP CLAMP, Harness wires	1
96	345702	FITTING, Elbow	1
97	328703	WASHER	2
98	335200	SCREW, Clamp	1
	5001495	VALVE, Pressure relief - Not Shown	1
99	347248	*HOSE, Head to valve	2
100	347247	*HOSE, Valve to head	2
101	346152	*CLAMP, 25.6mm	8
102	124341	*SCREW, Cover	2
103	314728	*O-RING, Housing cover	2
104	352322	*SCREW, Bracket cover ***New***	2
105	328649	*SCREW, Plunger	2
106	347238	*PLUNGER	1
107	347239	*HOUSING	1
108	347240	*PLATE, Housing	1
109	347241	*COVER, Housing	1
110	347242	*BRACKET, Mount	1
111	347243	*SUPPORT, Diaphragm	1
112	352328	*DIAPHRAGM ***New***	1
113	347245	*SEAL,BLOW-OFF	1
114	348820	*SPRING	1
115	900402	*NUT,LOCK	4
116	317893	TIE STRAP	AR
117	320107	TIE STRAP	AR
118	787131	POWERHEAD GASKET SET	1
119	350368	CLAMP, Oil hose	1
120	335200	SCREW, Ground leads to c/c	1
121	329743	STUD, Lower cover mount	2

ELECTRIC STARTER

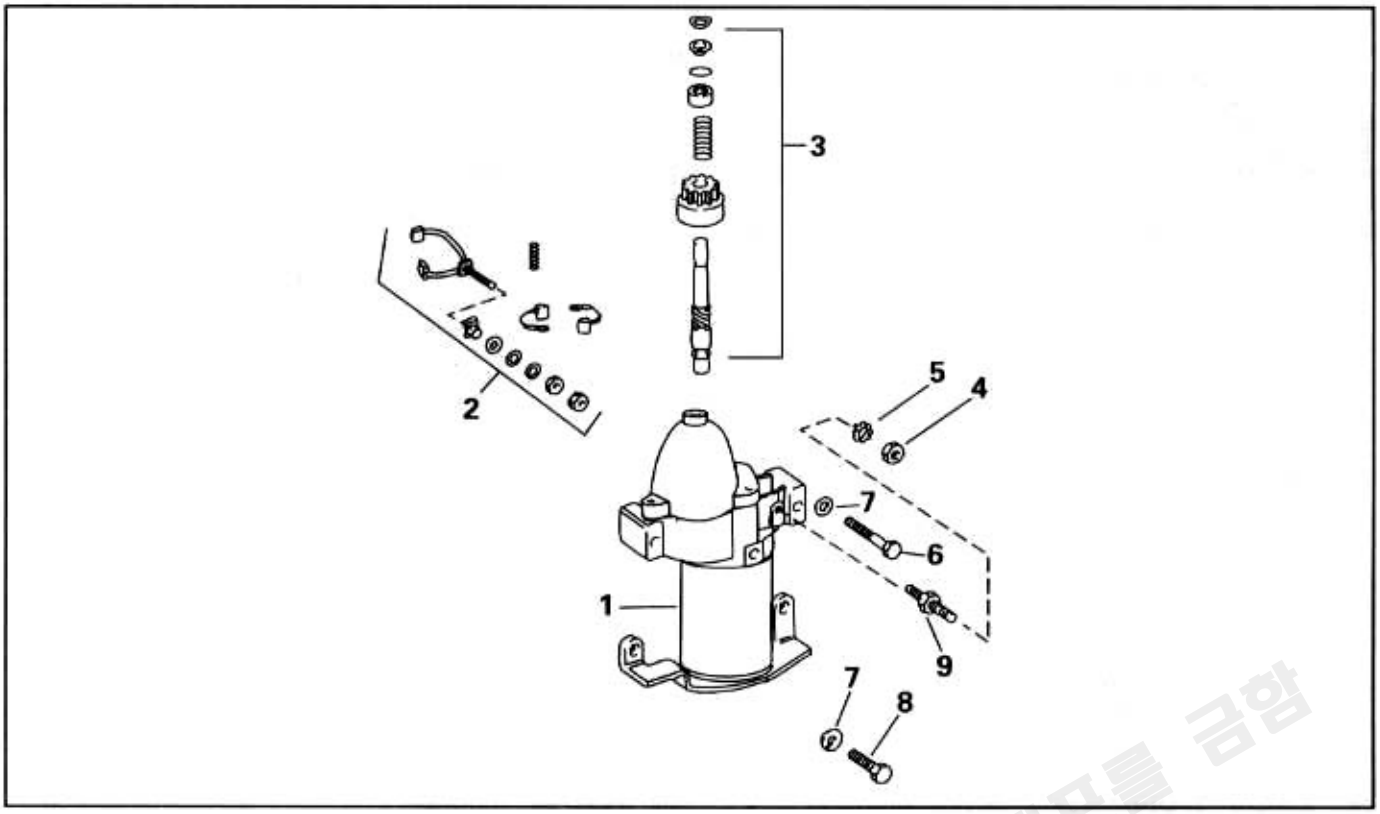

EPC3066

Ref	P/N	Name of Part	Qty	Ref	P/N	Name of Part	Qty
1	586731	STARTER MOTOR ASSEMBLY	1	6	331644	SCREW, Starter, mounting	2
2	433850	*BRUSH & SPRING SET	1	7	309543	LOCK WASHER, Support bracket	4
3	5000369	*KIT, Drive & shaft	1	8	552940	SCREW, Support bracket	2
4	328740	NUT, Ground	1	9	330143	BOLT, Double end	1
5	302290	LOCK WASHER, Ground wires	1				

상업적 목적으로 불법복사 및 배포를 금함

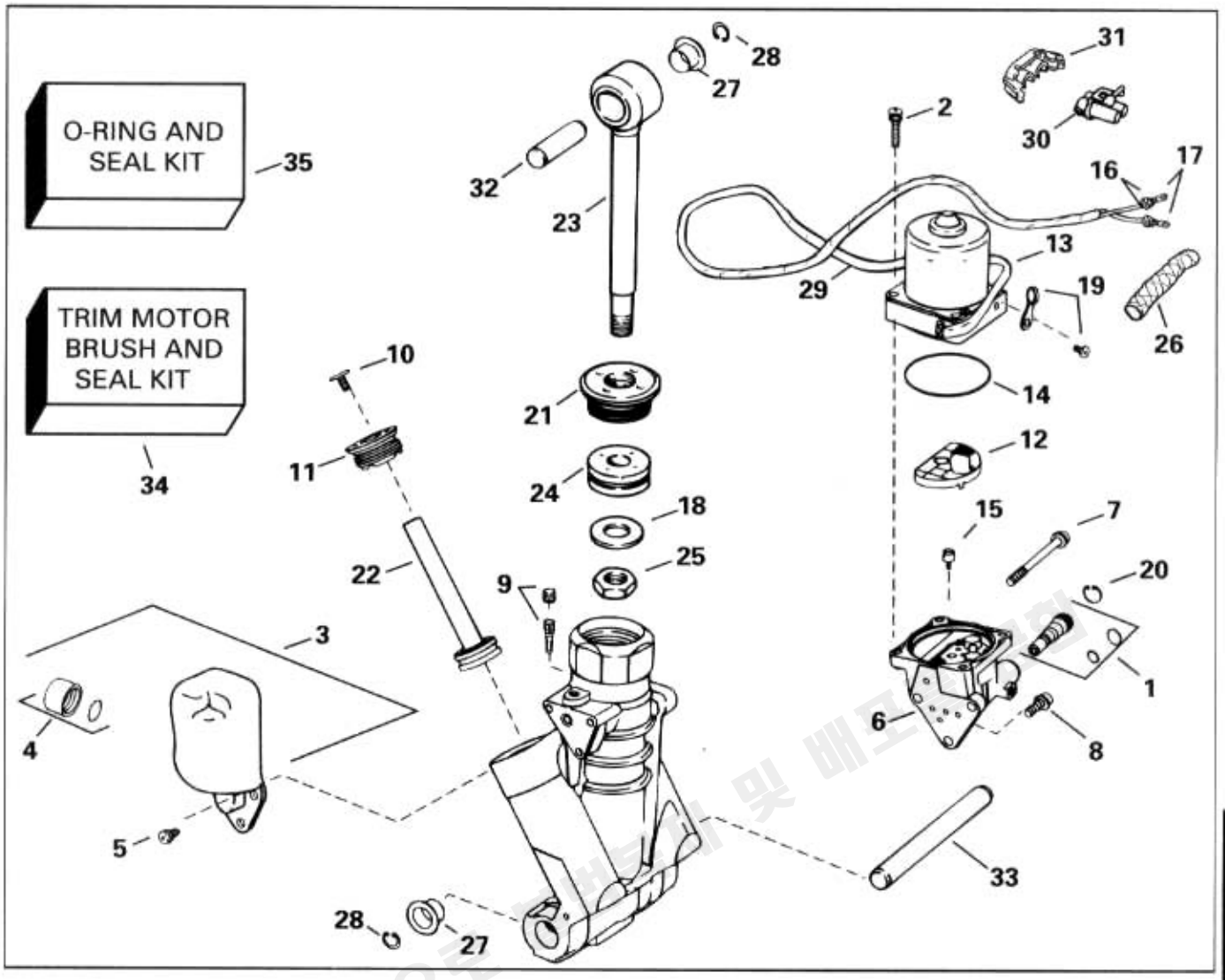

EPC3072

Ref	P/N	Name of Part	Qty	Ref	P/N	Name of Part	Qty
	5005115	HYDRAULIC Assy	1	18	324385	*WASHER	1
1	435340	*VALVE, Manual release & seal	1	19	435261	*CLAMP & SCREW Assy	1
2	337494	*SCREW, Motor to manifold	4	20	914069	*RETAINING RING	1
3	435341	*RESERVOIR & CAP Assy	1	21	390006	*CAP Assy	1
4	435342	**CAP & O-RING Assy	1	22	436389	*TRIM ROD	2
5	336746	*SCREW, Reservoir to manifold	3	23	436390	*ROD & EYE	1
6	435343	*VALVE BODY Assy	1	24	435264	*PISTON Assy	1
7	337495	*SCREW, Valve body, long	1	25	324390	*NUT	1
8	337517	*SCREW, Valve body, short	2	26	513816	SLEEVE, Trim mtr/sending unit leads	1
9	337530	*PLUG & SCREEN	1	27	335479	BUSHING, Upper & lower mount	4
10	337496	*THRUST PAD	2	28	336534	RETAINING RING	4
11	435345	*TRIM ROD END CAP & SEAL Assy	2	29	513817	SLEEVE, Motor leads	1
12	337497	*FILTER Assy	1	30	3010049	CONNECTOR, Motor	1
13	439937	*MOTOR & O-RING Assy	1	31	3010050	LOCK, Connector	1
14	321163	**O-RING	1	32	335480	PIN, Tilt cylinder	1
15	914053	**DRIVE, Pump	1	33	335463	ROD, Lower mount	1
16	3010063	**SEAL, Wire	2	34	585229	BRUSH & SEAL KIT, Trim motor	1
17	514823	*TERMINAL	2	35	434519	O-RING & SEAL KIT	1

EXHAUST HOUSING

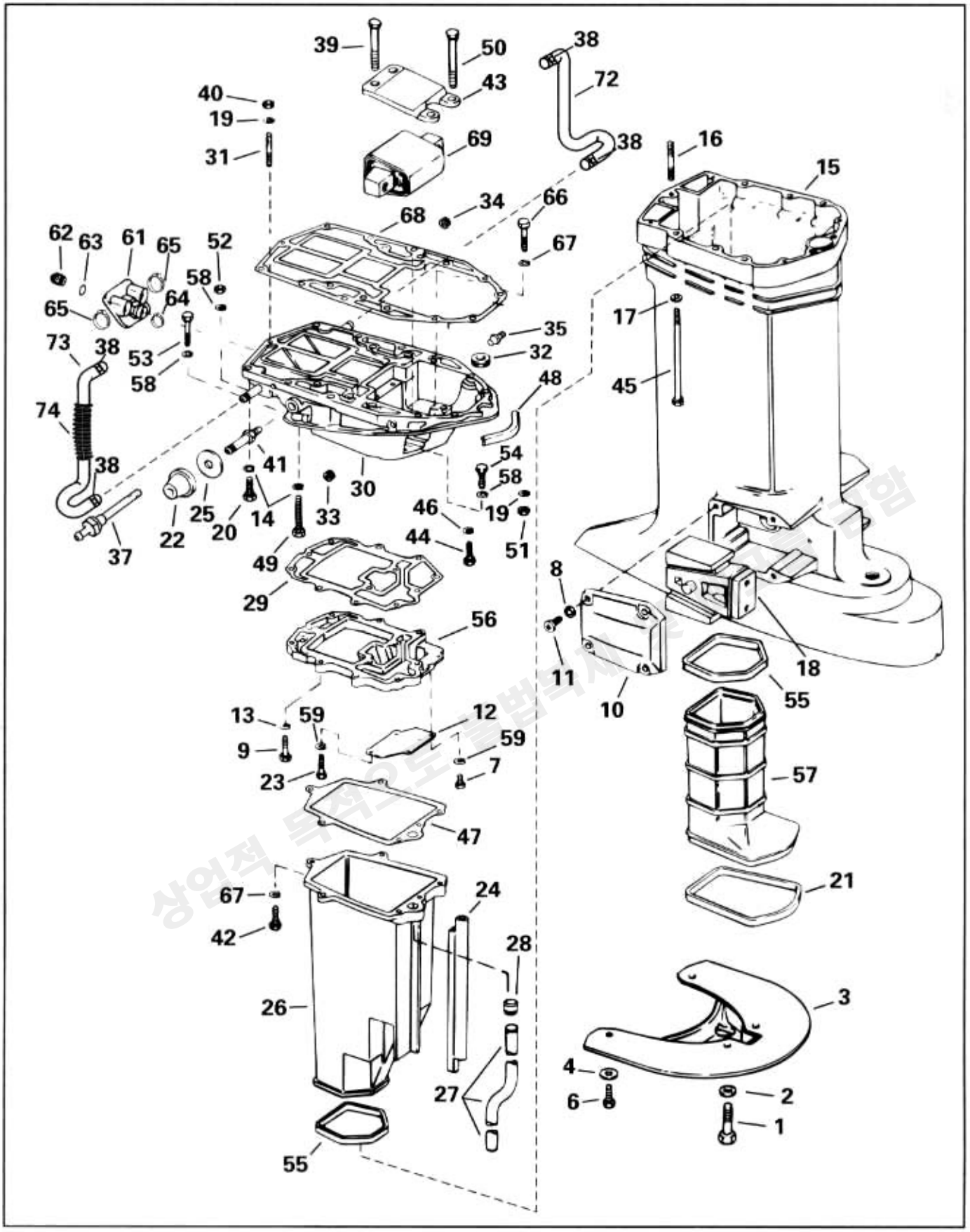

EPC3414

Ref	P/N	Name of Part	Qty
1	910736	SCREW, Plate & deflector 25 in. & 30 in. Models	2
2	301250	WASHER, Spray deflector 25 in. & 30 in. Models	2
3	345776	SPRAY DEFLECTOR 25 in. & 30 in. Models	1
4	911201	WASHER, Spray plate 25 in. & 30 in. Models	2
6	910741	SCREW, Spray plate 25 in. & 30 in. Models	2
7	124341	SCREW, Cover, short	2
8	301250	WASHER, Screw, mount cover	8
9	312978	SCREW, Plate to adapter	4
10	338741	COVER, Mount bracket lower	2
11	341013	SCREW, Cover	8
12	333565	COVER, Water plate	1
13	302290	LOCK WASHER, Plate to adapter	4
14	308688	LOCK WASHER, Cylinder to adapter	6
15	5004215	EXHAUST HOUSING 20 in. Models	1
15	435479	EXHAUST HOUSING 25 in. Models	1
15	435130	EXHAUST HOUSING 30 in. Models	1
16	316040	*STUD, Exhaust housing	1
17	308688	WASHER, Exhaust housing	6
18	434629	RUBBER MOUNT, Lower 20 in. Models	2
18	434632	RUBBER MOUNT, Lower 25 in. & 30 in. Models	2
19	301250	WASHER, Crankcase mounting	3
20	309484	SCREW, Cylinder to adapter, short	4
21	320961	SEAL, Gearcase to inner housing	1
22	349557	MOUNT, Engine cover	2
23	333165	SCREW, Cover, long	2
24	334118	SEAL, Exhaust housing, front	1
25	349556	WASHER, Mount	2
26	338597	EXHAUST HOUSING, Inner, upper	1
27	346897	WATER TUBE 20 in. Models	1
27	346898	WATER TUBE 25 in. Models	1
27	346899	WATER TUBE 30 in. Models	1
28	305145	GROMMET, Water tube	1
29	343809	GASKET, Plate to adapter	1
30	5001496	ADAPTER, Exhaust housing	1
31	314616	*STUD, Adapter	1
32	339717	*GROMMET, Shift rod	1
33	321164	*PLUG, Starboard, front	1
34	321164	*PLUG, Port, rear	1
35	345702	*NIPPLE, Vap sep to adapter	1
37	5001298	*NIPPLE, Exhaust back pressure	1
38	346151	CLAMP, 21mm, Adpt hoses	4
39	330930	SCREW, Upper mount	2
40	306422	NUT, Crankcase to adapter	1
41	329743	STUD, Cover mount	2
42	341010	SCREW, Inner housing to adapter	3
43	330929	PLATE, Upper mount	1
44	306503	SCREW, Adapter to crankcase	2
45	332128	SCREW, Exhaust housing to c/c	6
46	306470	LOCK WASHER	2
47	334113	GASKET, Inner exh hsg to water plate	1
48	333434	SEAL, Cover to adapter	1
49	911042	SCREW, Adapter to cylinder, long	2
50	330931	SCREW, Upper mount	2
51	306422	NUT, Powerhead to adapter	2
52	328742	NUT, Adapter to outer housing	1
53	341009	SCREW, Adapter to outer housing	2
54	341011	SCREW, Adapter to housing, outer	2
55	320936	SEAL, Exhaust housing	2
56	347251	WATER PLATE	1
57	341197	HOUSING, Exhaust lower inner 20 in. Models	1
57	338664	HOUSING, Exhaust lower inner 25 in. & 30 in. Models	1
58	329241	WASHER	5
59	302290	LOCK WASHER, Cover	2
61	345586	GROMMET Assy	1
62	436726	PLUG, Overboard indicator	1
63	301967	O-RING, Overboard indicator	1
64	352335	CLAMP, Grommet to adapter 33.1mm ***New***	1
65	349729	CLAMP, Grommet to adapter 41.0mm	2
66	341010	SCREW, Adapter to inner housing	3
67	302290	LOCK WASHER	6
68	351535	GASKET, Adapter to powerhead ***New*** Included in POWERHEAD GASKET SET	1
69	432017	RUBBER MOUNT Assy	1
72	347233	HOSE, Adapter to c/c Port	1
73	347234	HOSE, Adapter to c/c Stbd	1
74		TUBING, Convoluted Cut to length from, P/N 3010591	

MIDSECTION

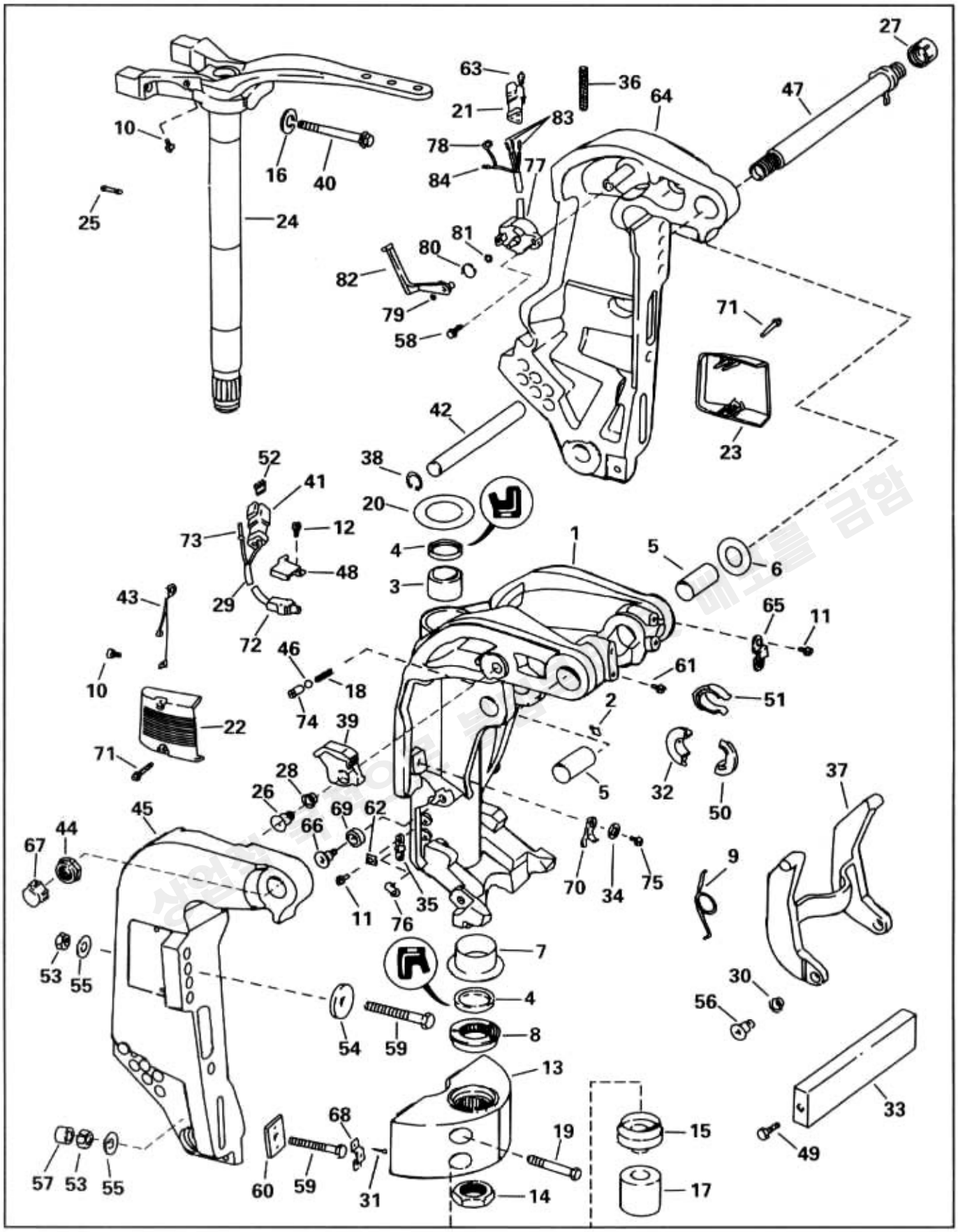
27
63
36
64
47
21
83
10
78
16
40
84
77
25
24
81
80
82
79
71
58
42
23
52
38
41
20
12
73
4
1
5
6
48
3
43
29
65
11
72
46
61
10
18
51
2
22
74
39
71
28
5
32
50
37
26
69
62
45
66
44
67
70
34
75
9
35
11
76
7
53
55
30
4
56
54
59
8
13
33
68
19
15
49
57
53
55
60
59
31
14
17

EPC3415

Ref	P/N	Name of Part	Qty
1	434691	SWIVEL BRACKET 20 in. Models	1
1	434724	SWIVEL BRACKET 25 in. Models	1
1	438084	SWIVEL BRACKET 30 in. Models	1
2	313607	*FITTING, Lubrication	3
3	320962	*BUSHING	1
4	335686	*SEAL	2
5	337579	*BUSHING, Swivel bracket	2
6	910992	*THRUST WASHER, Tilt tube	2
7	336819	*BUSHING, Lower pivot shaft	1
8	327696	KEEPER, Pivot shaft	1
9	336210	SPRING, Trail lock to bracket	1
10	335200	SCREW, Ground lead	2
11	335200	SCREW, Retainer	2
12	335200	SCREW, Bracket, tilt limit	1
13	340006	MOUNT BRACKET 20 in. Models	1
13	338744	MOUNT BRACKET 25 in. & 30 in. Models	1
14	320746	NUT, Mount bracket	1
15	912233	RETAINER, Pivot shaft seal 25 in. & 30 in. Models	1
16	313169	LOCK WASHER, Mount bolt	2
17	911312	SEAL, Steering tube 25 in. & 30 in. Models	1
18	336230	SPRING, Detent, tilt lock	1
19	334936	SCREW, Mount	4
20	320866	THRUST WASHER, Pivot shaft	1
21	514686	CONNECTOR, Sending unit, 3-pin	1
22	335474	COVER, Stern bracket, Stbd *Opt.*	1
23	335475	COVER, Stern bracket, Port *Opt.*	1
24	439471	STEERING ARM Assy FSL Model	1
24	437698	STEERING ARM Assy 25 in. Models	1
24	437699	STEERING ARM Assy 30 in. Models	1
24	434164	STEERING ARM Assy FPL, FHL Models	1
25	123692	CONNECTOR, Speedo hose 20 in. Models	1
26	335481	SCREW, Tilt lever to bracket	1
27	337586	WIPER, Tilt tube	1
28	335486	BUSHING, Tilt lever	1
29	512937	SLEEVE, Tilt limit lead	1
30	335701	BUSHING, Trail arm	2
31	319886	SCREW, Transom screw retainer	4
32	337592	COLLAR, Tilt limit, top	1
33	433580	ANODE, Stern bracket	1
34	328702	WASHER, Clip	1
35	336467	SUPPORT, Trail lock	1
36	513817	SLEEVE, Sending unit leads	1
37	335470	ARM, Trail lock	1
38	336529	RETAINING RING, Rod	2
39	335485	LEVER, Tilt lock	1
40	912345	SCREW, Upper mount	2
41	514696	CONNECTOR, 2-pin	1
42	336525	ROD, Trim limiter	1
43	584262	LEAD Assy, Ground	1
44	335554	NUT, Tilt tube	1
45	336506	STERN BRACKET, Starboard	1
46	336209	BALL, Detent, tilt lock	1
47	435007	TILT TUBE Assy	1
48	336171	BRACKET, Tilt limit switch	1
49	324816	SCREW, Anode	2
50	337593	COLLAR, Tilt limit, tilt tube	1
51	337591	CAM, Tilt limit switch	1
52	514697	WEDGE, 2-pin	1
53	313623	NUT, Stern bracket screw	4
54	307238	WASHER, Mounting screws	2
55	320248	WASHER, Mounting screws	4
56	335487	SCREW, Trail arm to bracket	2
57	318572	CAP, Mounting screws	4
58	328744	SCREW, Sending unit	2
59	327053	SCREW, Bracket to transom, 3 in. (76mm)	4
59	318573	SCREW, Bracket to transom 3½ in. (82mm)	4
59	336676	SCREW, Bracket to transom, 4 3/4 in. (121mm), standard	4
59	331578	SCREW, Bracket to transom, 5 in. (127mm)	4
59	321577	SCREW, Bracket to transom, 6 in. (152mm)	4
60	318272	PLATE, Mounting screws	2
61	335200	SCREW, Swivel bracket	2
62	336853	CLIP, Support	2
63	514682	WEDGE, 3-pin	1
64	336505	STERN BRACKET, Port	1
65	513787	RETAINER, Limit switch leads	1
66	335487	SCREW, Thrust roller, swivel bracket	2
67	317894	CAP, Tilt tube	1
68	318273	RETAINER, Mounting screws	2
69	335949	THRUST ROLLER	2
70	336172	RETAINER, Trail arm	1
71	337580	SCREW, Cover to stern bracket *Opt.*	4
72	586405	SWITCH Assy., Tilt limit	1
73	514679	*TERMINAL, Pin	2
74	334241	GUIDE, Ball detent, tilt lock	1
75	342191	SCREW, Retainer to bracket	1
76	335814	RETAINER, Trail lock spring	2
77	586408	SENDING UNIT Assy	1
78	513871	*TERMINAL, Ring	1
79	511527	*RETAINER	1
80	511528	*SPRING	1
81	320689	*NUT	1
82	342386	*ARM	1
83	514679	*TERMINAL, Pin	3
84	913927	*TERMINAL, Ring	1

STEERING LINK KIT (ACCESSORY)

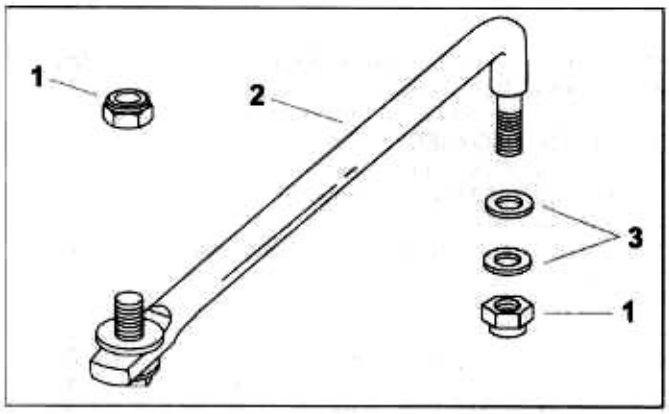

EPC3016

Ref	P/N	Name of Part	Qty
	175125	STEERING LINK KIT	1
1	315077	*LOCKNUT	2
2	175110	*ROD Assy	1
3	319453	*WASHER	2

상업적 목적으로 불법복제 및 배포를 금함

EPC3017

Ref	P/N	Name of Part	Qty
	175322	DUAL CABLE STEERING KIT	1
1	123077	*SCREW, Cable to connector	2
2	126296	*BRACKET, Steering tube	1
3	123204	*NUT, Steering tube	2
4	126299	*CONNECTOR, Cables to rod	1
5	315077	*LOCKNUT	4
6	319453	*WASHER	2
7	328694	*SCREW, Bracket	4
8	126617	*STEERING TUBE	1
9	319316	*WASHER, Steering tube	2
10	319253	*LUBE FITTING, 45°	2
11	337586	*WIPER NUT	1

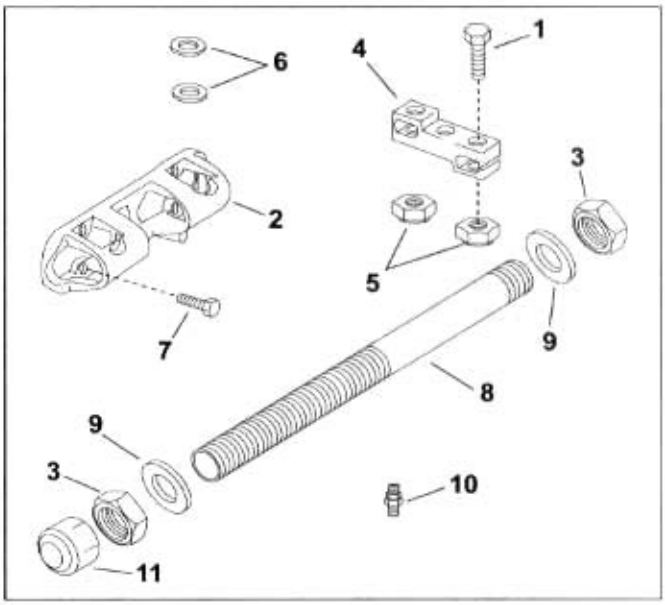

상업적 목적으로 불법복제 및 배포를 금함

GEARCASE - FHL & FHX MODELS ("L" TYPE GEARCASE)

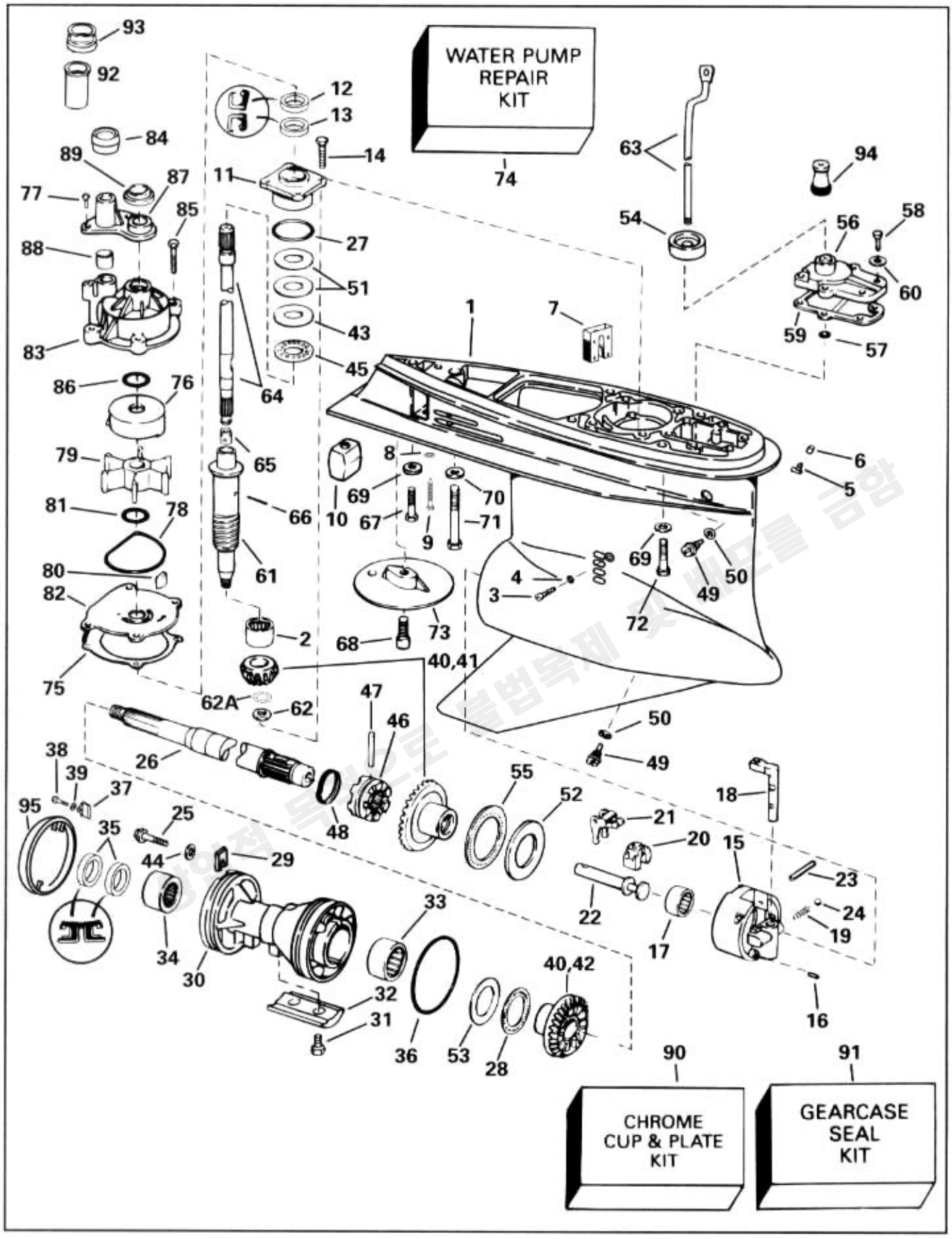

EPC3069

Ref	P/N	Name of Part		Qty
	5005553	GEARCASE Assy, Complete - Blue		1
1	5004912	*GEARCASE & BEARING Assy		1
2	387817	**BEARING, Pinion		1
3	324852	**RETAINING SCREW		1
4	332584	***SEAL, Pinion brg screw	A	1
5	336535	**FITTING, Pitot tube		1
6	305749	**CAP, Pitot tube fitting		1
7	350039	**SCREEN, Water inlet		1
8	307161	**LOCK WASHER, Anode		1
9	341219	**SCREW, Anode		1
10	436745	**ANODE, Gearcase		1
11	439476	*BEARING HSG Assy, Drive shaft		1
12	329922	**SEAL, Upper	A	1
13	329923	**SEAL, Lower	A	1
14	317624	*SCREW, Housing to gearcase		4
15	389455	*BEARING HSG Assy, Fwd gear		1
16	331880	**PIN, Housing		1
17	389039	**BEARING, Fwd gear		1
18	915954	*DETENT, Shifter		1
19	911962	*SPRING, Detent		1
20	334163	*CRADLE, Shifter		1
21	322938	*LEVER, Shift		1
22	322941	*SHAFT, Shift		1
23	328825	*PIN, Shift lever		1
24	160084	*BALL, Detent		1
25	350271	*SCREW, Retainer tab		2
26	5004765	*PROPELLER SHAFT		1
27	314728	*O-RING, Driveshaft bearing hsg	A	1
28	382408	*THRUST BEARING, Reverse gear		1
29	333957	*TAB, Retainer		2
30	5004257	*BEARING HSG Assy, Propshaft		1
31	908158	**SCREW, Anode		2
32	431708	**ANODE, Bearing housing		1
33	382407	**NEEDLE BEARING Assy, Front		1
34	436752	**NEEDLE BEARING Assy, Rear		1
35	334950	**SEAL, Prop shaft	A	2
36	305123	**O-RING, Propeller shaft housing	A	1
37	349001	**WEDGE, Propshaft hsg to GC		1
38	916070	**SCREW, Wedge		1
39	345998	**WASHER, Wedge screw		1
40	5004218	*GEAR SET, Fwd, Rev, Pinion		1
41	5004938	**GEARSET, Pinion, & forward gear		1
42	336561	**GEAR, Reverse		1
43	327656	*THRUST WASHER, Driveshaft		1
44	328743	*WASHER, Tab screw		2
45	387656	*THRUST BEARING, Driveshaft		1
46	337774	*SHIFTER, Clutch dog		1
47	313448	*PIN, Clutch dog		1
48	324369	*SPRING, Clutch dog pin		1
49	318544	*SCREW, Fill & drain	A	2
50	311598	**SEAL, Fill & drain screw		1
51	323362	*SHIM, 0.003 in. (0,07mm)		AR
51	323361	*SHIM, 0.004 in. (0,10mm)		AR
51	314745	*SHIM, 0.005 in. (0,12mm)		AR

Ref	P/N	Name of Part		Qty
52	327669	*THRUST WASHER, Forward gear		1
53	314731	*THRUST WASHER, Reverse gear		1
54	321008	*GROMMET, Exh hsg to shift rod		1
55	389042	*THRUST BRG, Fwd gear		1
56	5006241	*COVER & SEAL Assy, Shift rod	New	1
57	318372	**O-RING, Shift rod	A	1
58	302325	*SCREW, Shift rod cover		6
59	352165	*GASKET, Shift rod cover	New A	1
60	328702	*WASHER, Shift rod cover screw		6
61	345905	*DRIVESHAFT, Lower		1
62A	350038	*WASHER, Pinion nut	New	1
62	314730	*NUT, Pinion to driveshaft		1
63	329864	SHIFT ROD - 20in. Model		1
63	329865	SHIFT ROD - 25in. Model		1
64	5000614	DRIVESHAFT, Upper - 20in. Model		1
64	5000623	DRIVESHAFT, Upper - 25in. Model		1
65	338504	*RETAINER, Driveshaft		1
66	311538	*ROLL PIN, Driveshaft		1
67	330263	SCREW, Mounting, 3/8 in. X 3.50 in.		1
68	313715	SCREW, Trim tab cover		1
69	330266	WASHER, Mounting screw, 3/8 in.		5
70	330265	WASHER, Mounting screw, 7/16 in.		1
71	331998	SCREW, Mounting, 7/16 in. X 3.50 in.		1
72	331999	SCREW, Mounting, 3/8 in. X 1.75 in.		4
73	336284	COVER, Trim tab opening		1
74	5001595	WATER PUMP REPAIR KIT		1
75	338484	*GASKET, Impeller plate	A	1
76	338486	*CUP, Impeller-(Stainless)		1
77	306643	*SCREW, Cover to impeller hsg		2
78	331353	*SEAL, Impeller housing plate		1
79	5001593	*IMPELLER Assy		1
80	331107	*KEY, Impeller		1
81	302035	*O-RING, Impeller to plate		1
82	338485	*PLATE, Impeller hsg-(Stainless)		1
83	435959	*IMPELLER HOUSING		1
84	349354	*SEAL, Pump to exh hsg - 20in. Model		1
85	302325	*SCREW, Impeller housing		4
86	331188	*O-RING, Cup to housing		1
87	338893	*COVER, Impeller housing		1
88	314008	*GROMMET, Water tube to cover		1
89	320943	*GROMMET, Pump to exh hsg		1
90	435526	CHROME CUP & PLATE KIT	Opt.	1
	338551	*CUP, Impeller-(Chrome) Not shown		1
	338552	*PLATE, Impeller hsg-(Chrome) Not shown		1
91	5000411	GEARCASE SEAL KIT		1
92	338636	SLEEVE, Water pump - 25in. Model		1
93	338601	GROMMET, Sleeve - 25in. Model		1
94	321122	SPACER, Shift rod cvr. - 25in. Model		1
95	126669	RING, Propeller seal (4-blade Renegade)	Opt.	1

A Contents of GEARCASE SEAL KIT

GEARCASE - FPL, FSL, FPX & FPZ MODELS ("M" TYPE GEARCASE)

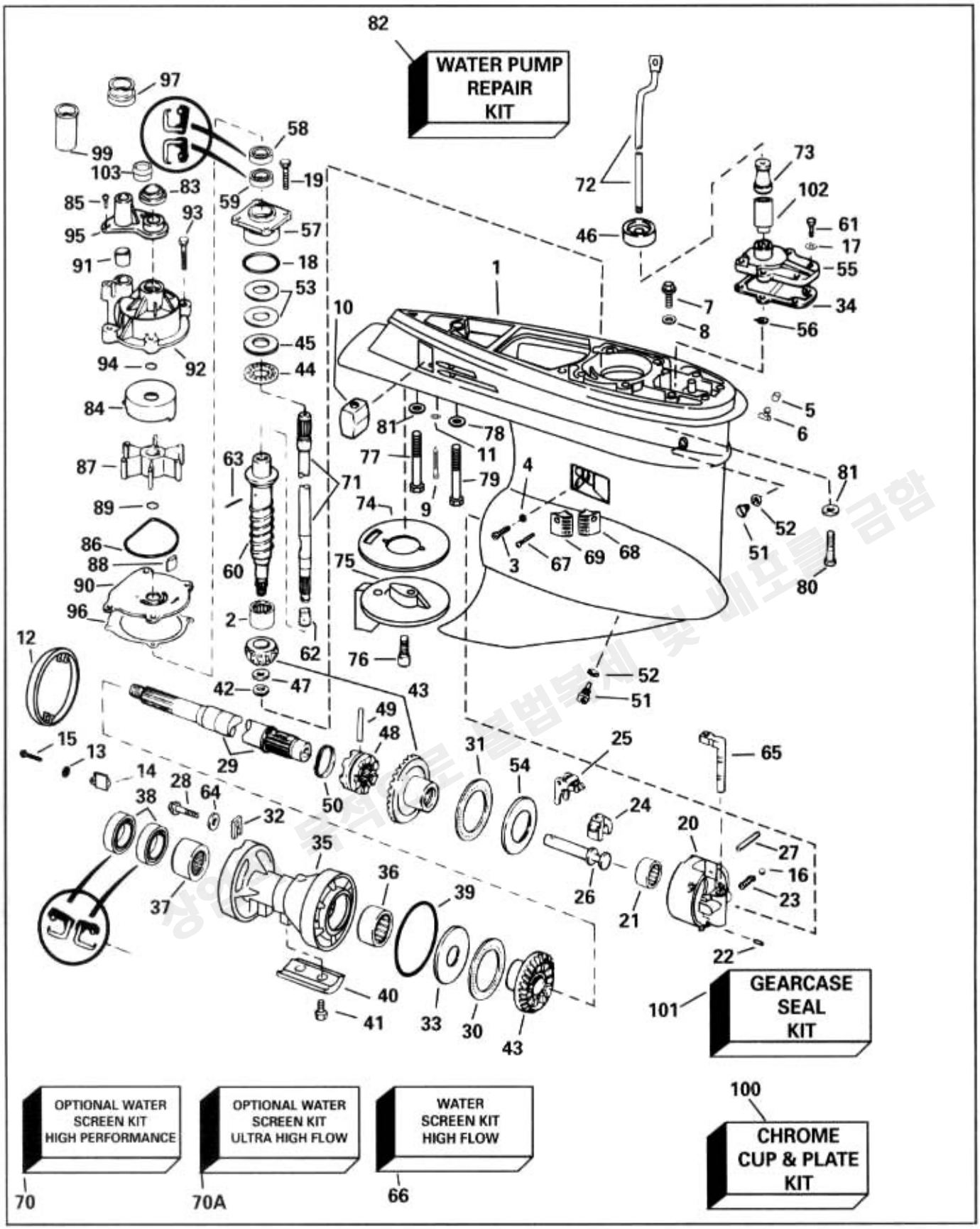

GEARCASE - FPL, FSL, FPX & FPZ MODELS ("M" TYPE GEARCASE)

EPC3416

Ref	P/N	Name of Part		Qty
	5005548	GEARCASE Assy, Complete, BLUE Less Driveshaft & Shift Shaft		1
	5005549	GEARCASE Assy, Complete, WHITE Less Driveshaft & Shift Shaft		1
1	5001589	*GEARCASE & BEARING Assy		1
2	387817	**BEARING, Pinion		1
3	324852	**SCREW, Pinion bearing		1
4	332584	***SEAL, Pinion brg screw		1
5	305749	**CAP, Pitot tube fitting		1
6	336535	**NIPPLE, Pitot tube		1
7	341220	**SCREW, Pitot seal		1
8	437330	**WASHER & SEAL Assy, Pitot	A	1
9	341219	**SCREW, Anode		1
10	436745	**ANODE, Gearcase		1
11	307161	**LOCK WASHER, Anode		1
12	346462	*RING, Propeller seal (3-blade)		1
12	350626	RING, Propeller seal (4-blade Renegade)	Opt.	1
13	345998	*WASHER, Wedge screw		1
14	349001	*WEDGE, Propshaft hsg to GC		1
15	916070	*SCREW, Wedge		1
16	160084	*BALL, Detent		1
17	328702	*WASHER, Shift rod cover screw		6
18	314728	*O-RING, Driveshaft bearing hsg	A	1
19	317624	*SCREW, Housing to gearcase		4
20	5001601	*BEARING HSG Assy, Fwd Gear		1
21	389039	** BEARING, Fwd Gear		1
22	331880	**PIN, Housing		1
23	911962	*SPRING, Detent		1
24	334163	*CRADLE, Shifter		1
25	322938	*LEVER, Shift		1
26	348483	*SHAFT, Shift		1
27	317274	*PIN, Shift lever		1
28	350271	*SCREW, Retainer tab		2
29	5004765	*PROPELLER SHAFT		1
30	389042	*THRUST BEARING, Reverse gear		1
31	389042	*THRUST BEARING, Fwd gear		1
32	333957	*TAB, Retainer		2
33	349193	*THRUST WASHER, Reverse gear		1
34	352165	*GASKET, Shift rod cover	New A	1
35	5001587	*BEARING HSG Assy, Propshaft		1
36	382407	**NEEDLE BEARING Assy, Front		1
37	436752	**NEEDLE BEARING Assy, Rear		1
38	334950	**SEAL, Propshaft	A	2
39	326849	** O-RING, Propshaft housing	A	1
40	431708	**ANODE, Bearing housing		1
41	908158	**SCREW, Anode		2
42	314730	*NUT, Pinion to driveshaft		1
43	5001582	*GEAR SET, Fwd, Rev, Pinion		1
44	387656	*THRUST BEARING, Driveshaft		1
45	327656	*THRUST WASHER, Driveshaft		1
46	321008	*GROMMET, Exh hsg to shift rod		1
47	350038	*WASHER, Pinion nut		1
48	337774	*SHIFTER, Clutch dog		1
49	313448	*PIN, Clutch dog		1
50	324369	*SPRING, Clutch dog pin		1
51	318544	*SCREW, Fill & drain	A	2
52	311598	**SEAL, Fill & drain screw		2
53	323362	*SHIM, 0.003 in. (0.07mm)		AR
53	323361	*SHIM, 0.004 in. (0.10mm)		AR
53	314745	*SHIM, 0.005 in. (0.12mm)		AR
54	327669	*THRUST WASHER, Forward gear		1
55	5006241	*COVER & SEAL Assy, Shift rod	New	1
56	318372	**O-RING, Shift rod	A	1
57	439476	*BEARING HSG Assy, Driveshaft		1
58	329922	**SEAL, Upper	A	1
59	329923	**SEAL, Lower	A	1
60	347371	*DRIVESHAFT, Lower		1
61	302325	*SCREW, Shift rod cover		6
62	338504	*RETAINER, Driveshaft		1

A Contents of GEARCASE SEAL KIT

Ref	P/N	Name of Part		Qty
63	311538	*ROLL PIN, Driveshaft		1
64	328743	*WASHER, Tab screw		2
65	347377	*DETENT, Shifter		1
66	5005063	*WATER SCREEN KIT, High flow		1
67	337061	**SCREW, Water intake screens		2
68	350264	**SCREEN, Wtr intake-high flow, Port		1
69	350265	**SCREEN, Wtr intake-high flow, Stbd		1
70	5005124	WATER SCREEN KIT, High Perf.	Opt.	1
	337061	*SCREW, Water intake screens	NS	2
	348479	*SCREEN, Wtr intake-high perf, Port	NS	1
	348480	*SCREEN, Wtr intake-high perf, Stbd	NS	1
70A	5006337	WATER SCREEN KIT, Ultra High Flow	Opt.	1
	337061	*SCREW, Water intake screens	NS	2
	350946	*SCREEN, Wtr intake-Port	NS	1
	350945	*SCREEN, Wtr intake-Stbd.	NS	1
71	5000614	DRIVESHAFT Assy, Upper 20 in. Models		1
71	5000623	DRIVESHAFT Assy, Upper 25 in. Models		1
71	5000628	DRIVESHAFT Assy, Upper 30 in. Models		1
72	347300	SHIFT ROD 20 in. Models		1
72	347301	SHIFT ROD 25 in. Models		1
72	347391	SHIFT ROD 30 in. Models		1
73	321122	SPACER, Shift rod cover 25 in. & 30 in. Models		1
74	331409	SEAL, Trim tab		1
75	338742	TRIM TAB		1
76	313715	SCREW, Trim tab		1
77	330263	SCREW, Mounting, 3/8 in. X 3.50 in.		1
78	330265	WASHER, Mounting screw, 7/16 in.		1
79	331998	SCREW, Mounting, 7/16 in. X 3.50 in.		1
80	331999	SCREW, Mounting, 3/8 in. X 1.75 in.		4
81	330266	WASHER, Mounting screw, 3/8 in.		5
82	5001595	WATER PUMP REPAIR KIT,		1
83	320943	*GROMMET, Pump to exh housing		1
84	338486	*CUP, Impeller-(Stainless)		1
85	306643	*SCREW, Cover to impeller hsg		2
86	331353	*SEAL, Impeller housing plate		1
87	5001593	*IMPELLER Assy		1
88	331107	*KEY, Impeller		1
89	302035	*O-RING, Impeller to plate		1
90	338485	*PLATE, Impeller hsg-(Stainless)		1
91	314008	*GROMMET, Water tube to cover		1
92	435959	*IMPELLER HOUSING		1
93	302325	*SCREW, Impeller housing		4
94	331188	*O-RING, Cup to housing		1
95	338893	*COVER, Impeller housing		1
96	338484	*GASKET, Impeller plate	A	1
97	338601	*GROMMET, Sleeve to exh hsg 25 in. & 30 in. Models		1
99	338636	*SLEEVE, Pump cover extension 25 in. Models		1
99	338667	*SLEEVE, Pump cover extension 30 in. Models		1
100	435526	CHROME CUP & PLATE KIT	Opt.	1
	338551	*CUP, Impeller-(Chrome) Not shown		1
	338552	*PLATE, Impeller hsg-(Chrome) Not shown		1
101	5000411	GEARCASE SEAL KIT		1
102	339346	EXTENSION, Shift rod spacer 30 in. Models		1
103	349354	SEAL, Impeller hsg to exh hsg 20 in. Models		1

GEARCASE - FCX & FCZ MODELS ("M" TYPE GEARCASE)

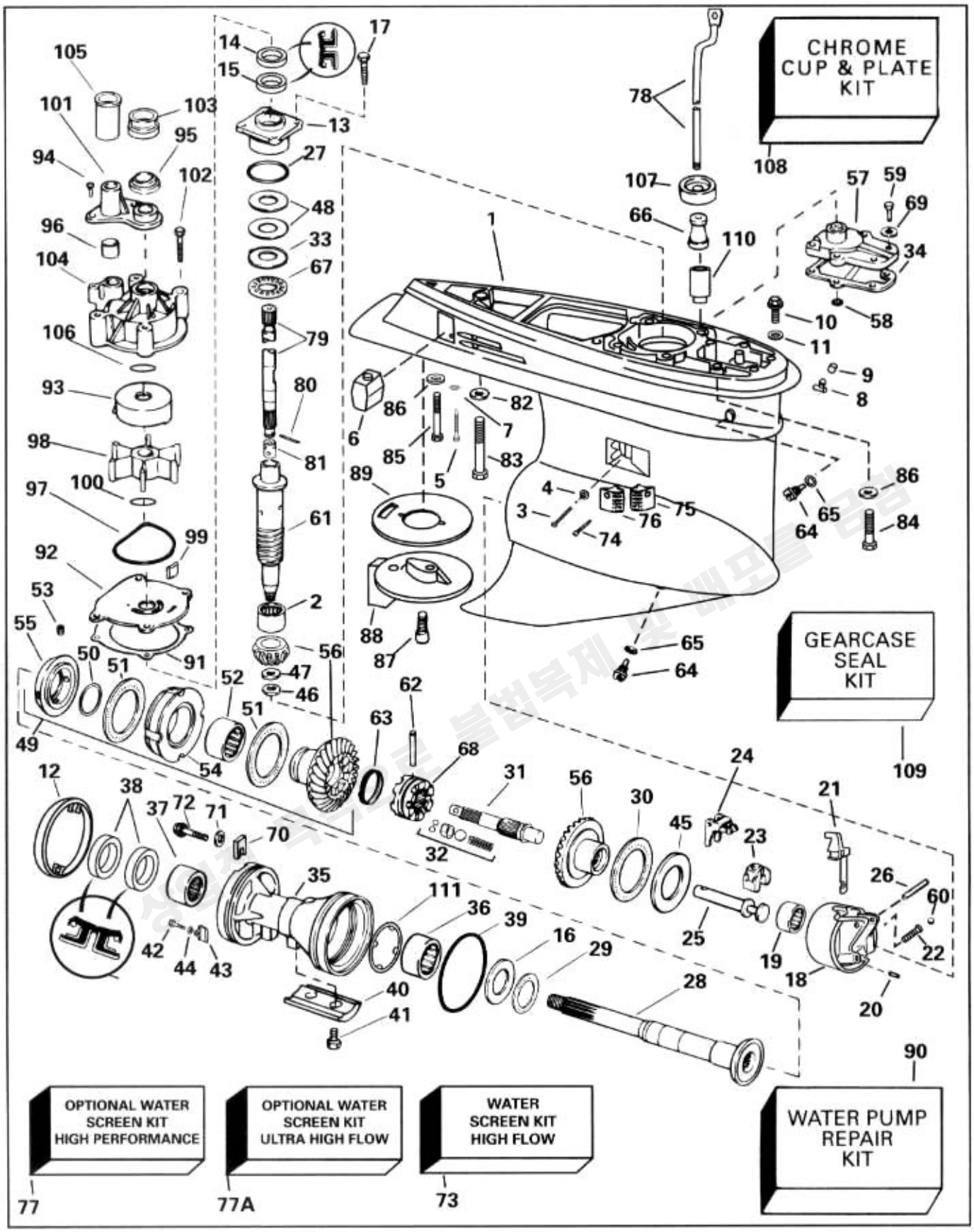

EPC3071

Ref	P/N	Name of Part		Qty
	5005550	GEARCASE Assy, Complete, White		1
1	5001589	*GEARCASE & BEARING Assy		1
2	387817	**BEARING, Pinion		1
3	324852	**SCREW, Pinion bearing		1
4	332584	***SEAL, Pinion brg screw		1
5	341219	**SCREW, Anode		1
6	436745	**ANODE		1
7	307161	**LOCKWASHER, Anode		1
8	336535	*NIPPLE, Pitot tube		1
9	305749	*CAP, Pitot tube fitting		1
10	341220	*SCREW, Pitot seal		1
11	437330	*WASHER & SEAL Assy, Pitot tube	A	1
12	346462	*RING, Propeller seal (3 blade)		1
13	439476	*BEARING HSG Assy, Driveshaft		1
14	329922	**SEAL, Upper	A	1
15	329923	**SEAL, Lower	A	1
16	313447	*THRUST WASHER, Propshaft		1
17	317624	*SCREW, Housing to gearcase		4
18	5001602	*BEARING HSG Assy, Rev Gear		1
19	389039	**BEARING, Rev gear		1
20	331880	**PIN, Housing		1
21	347378	*DETENT, Shift		1
22	911962	*SPRING, Detent		1
23	334163	*CRADLE, Shift		1
24	322938	*LEVER, Shift		1
25	348484	*SHAFT, Shift		1
26	328825	*PIN, Shift lever		1
27	314728	*O-RING, Driveshaft bearing hsg	A	1
28	5001578	*PROPELLER SHAFT		1
29	382408	*THRUST BEARING, Propshaft		1
30	389042	*THRUST BEARING, Reverse gear		1
31	5000249	*CLUTCH SHAFT Assy		1
32	5005096	**KIT, Clutch Shaft Retainer		1
33	327656	*THRUST WASHER, Driveshaft		1
34	352165	*GASKET, Shift rod cover New	A	1
35	5001588	*BEARING HSG Assy, Propshaft		1
36	431926	**NEEDLE BEARING Assy, Front		1
37	436752	**NEEDLE BEARING Assy, Rear		1
38	334950	**SEAL, Propshaft	A	2
39	326849	**O-RING, Propshaft shaft hsg	A	1
40	431708	**ANODE, Bearing housing		1
41	908158	**SCREW, Anode		2
42	916070	*SCREW, Wedge		1
43	349001	*WEDGE, Propshaft hsg to GC		1
44	345998	*WASHER, Wedge screw		1
45	327669	*THRUST WASHER, Reverse gear		1
46	314730	*NUT, Pinion to driveshaft		1
47	350038	*WASHER, Pinion nut		1
48	323362	*SHIM, 0.003 in. (0,07mm)		AR
48	323361	*SHIM, 0.004 in. (0,10mm)		AR
48	314745	*SHIM, 0.005 in. (0,12mm)		AR
49	5001586	*GEAR SET Assy		1
50	338717	**SHIM, 0.003 in. (0,07mm)		AR
50	338718	**SHIM, 0.004 in. (0,10mm)		AR
50	338719	**SHIM, 0.005 in. (0,12mm)		AR
51	385043	**THRUST BEARING, Fwd gear		2
52	389039	**BEARING, Fwd gear		1
53	338716	**SET SCREW, Thrust flange		4
54	333885	**HOUSING, Fwd gear		1
55	337796	**THRUST FLANGE, Fwd gear		1
56	5001585	**GEAR SET, Fwd, Rev, Pinion		1
57	5006241	*COVER & SEAL ASSY, Shift rod	New	1
58	318372	**O-RING, Shift rod	A	1
59	302325	*SCREW, Shift rod cover		6
60	160084	*BALL, Detent		1
61	347371	*DRIVESHAFT, Lower		1
62	313448	*PIN, Clutch dog		1
63	324369	*SPRING, Clutch dog pin		1

A Contents of GEARCASE SEAL KIT

Ref	P/N	Name of Part		Qty
64	318544	*SCREW, Fill & drain	A	2
65	311598	**SEAL, Fill & drain screw		1
66	321122	*SPACER, Shift rod cover		1
67	387656	*THRUST BEARING, Driveshaft		1
68	337774	*SHIFTER, Clutch dog		1
69	328702	*WASHER, Shift rod cover screw		6
70	333957	*TAB, Retainer		2
71	328743	*WASHER, Tab screw		2
72	350271	*SCREW, Retainer tab		2
73	5005063	*WATER SCREEN KIT, High flow		1
74	337061	**SCREW, Water intake screens		2
75	350264	**SCREEN, Wtr intake-high flow, Port		1
76	350265	**SCREEN, Wtr intake-high flow, Stbd		1
77	5005124	WATER SCREEN KIT, High Perf.	Opt.	1
	337061	*SCREW, Water intake screens	NS	2
	348479	*SCREEN, Wtr intake-high perf, Port	NS	1
	348480	*SCREEN, Wtr intake-high perf, Stbd	NS	1
77A	5006337	WATER SCREEN KIT, Ultra High Flow	Opt.	1
	337061	*SCREW, Water intake screens	NS	2
	350946	*SCREEN, Wtr intake-Port	NS	1
	350945	*SCREEN, Wtr intake-Stbd.	NS	1
78	347301	SHIFT ROD 25 in. Models		1
78	347391	SHIFT ROD 30 in. Models		1
79	5000623	DRIVESHAFT Assy, Upper 25 in. Models		1
79	5000628	DRIVESHAFT Assy, Upper 30 in. Models		1
80	311538	*ROLL PIN, Driveshaft		1
81	338504	*RETAINER, Driveshaft		1
82	330265	WASHER, Mounting screw, 7/16 in.		1
83	331998	SCREW, Mounting, 7/16 in. X 3.50 in.		1
84	331999	SCREW, Mounting, 3/8 in. X 1.75 in.		4
85	330263	SCREW, Mounting, 3/8 in. X 3.50 in.		1
86	330266	WASHER, Mounting screw, 3/8 in.		5
87	313715	SCREW, Trim tab		1
88	338743	TRIM TAB		1
89	331409	SEAL, Trim tab		1
90	5001595	WATER PUMP REPAIR KIT		1
91	338484	*GASKET, Impeller plate	A	1
92	338485	*PLATE, Impeller hsg-(Stainless)		1
93	338486	*CUP, Impeller-(Stainless)		1
94	306643	*SCREW, Cover to impeller hsg		2
95	320943	*GROMMET, Pump to exh hsg		1
96	314008	*GROMMET, Water tube to cover		1
97	331353	*SEAL, Impeller housing plate		1
98	5001593	*IMPELLER Assy		1
99	331107	*KEY, Impeller		1
100	302035	*O-RING, Impeller to plate		1
101	338893	*COVER, Impeller housing		1
102	302325	*SCREW, Impeller housing		4
103	338601	*GROMMET, Sleeve to exh hsg		1
104	435959	*IMPELLER HOUSING		1
105	338636	*SLEEVE, Pump cover extension 25 in. Models		1
105	338667	*SLEEVE, Pump cover extension 30 in. Models		1
106	331188	*O-RING, Cup to housing		1
107	321008	GROMMET, Exh hsg to shift rod		1
108	435526	CHROME, CUP & PLATE KIT	Opt.	1
	338551	*CUP, Impeller-(Chrome) Not shown		1
	338552	*PLATE, Impeller hsg-(Chrome) Not shown		1
109	5000411	GEARCASE SEAL KIT		1
110	339346	*EXTENSION, Shift rod spacer 30 in. Models		1
111	350228	RETAINER, Ring		1

PROPELLERS & HARDWARE (ALUMINUM) (ACCESSORY)

EPC4001

Propellers listed for common reference.
Propellers may not be applicable with all models in every application.

EPC4001

Blades	Material or Design	Prop Size	Right Hand Propeller	Propeller Hub	Converging Ring	Propeller Hub Sleeve
3	Std.	15 1/2 x 13	177132	387157	332394	313926
		15 1/2 x 15	177133			
		15 x 17	177134			
		14 1/2 x 19	177135			
		14 1/4 x 21	177136			
		14 1/4 x 23	177137			

***Ventilation Ring** - ("M" Type G/C Only) uses P/N 346462*

(See Parts and Accessories Bulletin 2000-01 (P) for additional information on the use of Ventilation (weed) Rings.)

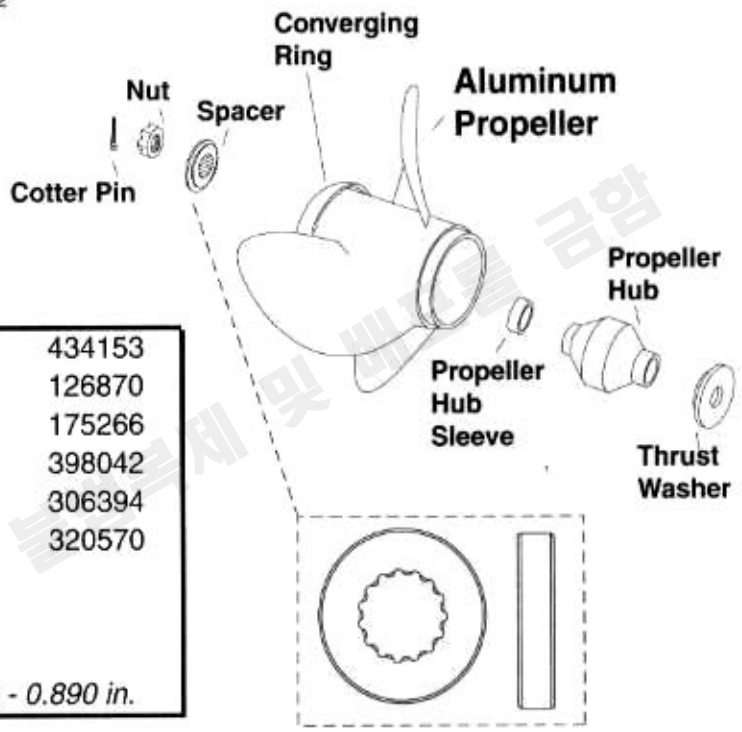

Prop Hardware

Propeller Hardware Kit with Thrust Washer	434153
*Thrust washer	126870
**Propeller Nut Kit	175266
**Nut	398042
**Cotter Pin	306394
**Spacer	320570

Material - Brass
Splines - 15
O.D. - 1 7/8 in.
Shaft diameter at spline - 0.890 in.

상업적 목적으로 불법 복제 및 배포를 금함

PROPELLERS & HARDWARE (STAINLESS STEEL 3 BLADE) (ACCESSORY)

EPC4002

Propellers listed for common reference.
Propellers may not be applicable with all models in every application.

EPC4002

Blades	Design	Prop Size	Cupping	Right Hand Propeller	Left Hand Propeller	Propeller Hub	Propeller Hub Sleeve
3	SST	15 1/2 x 14	Single	390831	N/A	175401	313926
		15 x 15		174926	174927		
		15 x 16		389925	N/A		
		14 3/4 x 17		176615	176616		
		14 3/4 x 19		176617	176618		
		14 3/4 x 21		176619	176620		
		14 1/4 x 23		N/A	N/A		
	RAKER	14 1/2 x 18	Double	394752	N/A		
		14 1/2 x 20		394753			
		14 1/2 x 22		394754	398503		
		14 1/2 x 24		394755	398504		
		14 1/2 x 26		394756	N/A		
		14 1/2 x 28		177009	N/A		
		14 1/2 x 30		177010	N/A		
	VIPER	14 3/4 x 17	Single	176626	176629		
		14 3/4 x 19		176627	176630		
		14 3/4 x 21		176628	176902		
		14 1/4 x 23		174816	N/A		

***Ventilation Ring** - ("M" Type G/C Only) uses P/N 346462*

(See Parts and Accessories Bulletin 2000-01 (P) for additional information on the use of Ventilation (weed) Rings.)

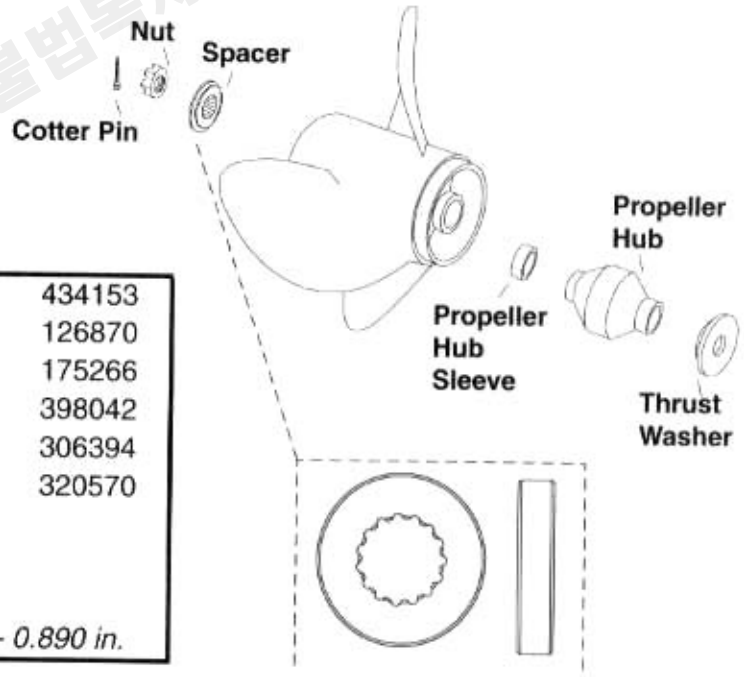

Prop Hardware

Propeller Hardware Kit with Thrust Washer	434153
*Thrust washer	126870
**Propeller Nut Kit	175266
**Nut	398042
**Cotter Pin	306394
**Spacer	320570

Material - Brass
Splines - 15
O.D. - 1 7/8 in.
Shaft diameter at spline - 0.890 in.

상업용 목적으로 불법복제 · 배포를 금함

PROPELLERS & HARDWARE (STAINLESS STEEL 4 BLADE) (ACCESSORY)

EPC4003

Propellers listed for common reference.

Propellers may not be applicable with all models in every application.

EPC4003

Blades	Design	Prop Size	Right Hand Propeller	Left Hand Propeller	Propeller Hub	Propeller Hub Sleeve	Weed ring
4	**Cyclone**	14 1/2 x 17	177189	177190	175401	313926	N/A
		14 1/4 x 19	177191	177192			
		14 1/8 x 21	177193	177194			
		14 1/8 x 23	176999	177000			
	Renegade Bass	13 1/2 x 23	176058		431730		126669 & 350626
		13 1/2 x 25	175738				
		13 1/2 x 27	177126				

"O" & "L" Type G/C uses P/N 126669
"M" Type G/C uses P/N 350626

(See Parts and Accessories Bulletin 2000-01 (P) for additional information on the use of Ventilation (weed) Rings.)

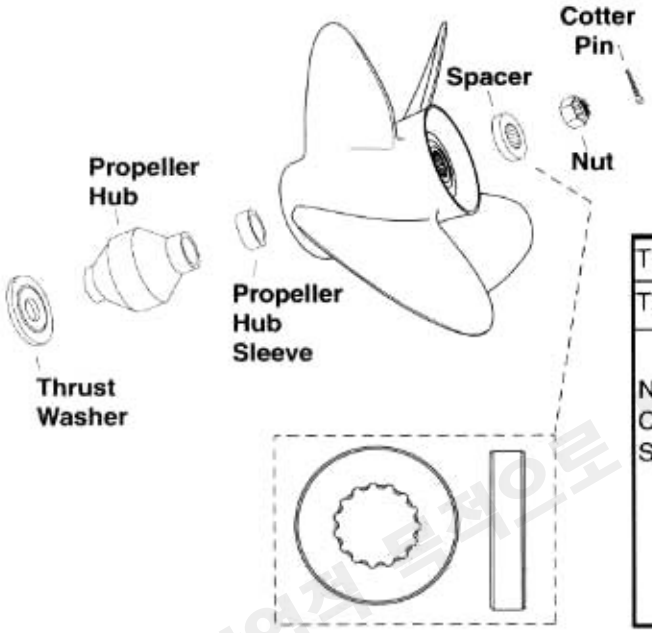

Prop Hardware

Thrust washer - ***CYCLONE PROPS***	126870
Thrust washer - ***RENEGADE BASS PROPS***	126869
Nut	398042
Cotter Pin	306394
Spacer	320570

Spacer reference information

Material - Brass
Splines - 15
O.D. - 1 7/8 in.
Shaft diameter at spline - 0.890 in.

상업적 목적으로 무단 전재 및 배포 금지

EPC4004

Blades	Design		Prop Size	Right Hand Propeller	Left Hand Propeller	Propeller Hub	Propeller Hub Sleeve
3		**SRX**	14 1/2 x 27	391863	N/A	175401	313926

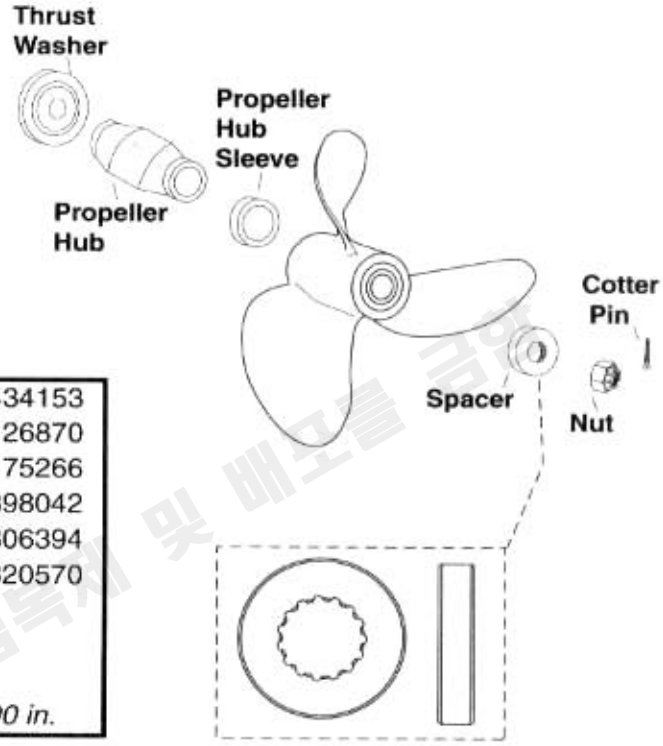

Prop Hardware

Propeller Hardware Kit with Thrust Bushing	434153
*Thrust bushing	126870
**Propeller Nut Kit	175266
**Nut	398042
**Cotter Pin	306394
**Spacer	320570

Material - Brass
Splines - 15
O.D. - 1 7/8 in.
Shaft diamter at spline - 0.890 in.

상업적 목적으로 불법복사 및 배포를 금함

상업적 목적으로 불법복제 및 배포를 금함

상업적 목적으로 불법복제 및 배포를 금함

2005 Parts Catalog

EVINRUDE®
Johnson®
GENUINE PARTS

5006035